CASAMBI

SHARKWARD

2025-2026

BLUETOOTH® NLC SIG MESH SENSOR &CONTROLLER

CASAMBI

WIRELESS LIGHTING CONTROL SOLUTION AT YOUR FINGERTIPS

Sharkward is a leading manufacturer of energy efficient products for north America,Europe and have been designing and manufacturing since 2008.These products include passive Infrared sensor,Microwave sensor **BLUETOOTH SIG MESH LIGHTING CONTROLS.**

Since 2024,Sharkward has been working with **CASAMBI**,we've launched a series Wireless devices: bluetooth Sensors, Controller, Switches, etc...

CASAMBI

SHARKWARD

THE FUTURE OF LIGHTING CONTROL IS WIRELESS

Sharkward get UL for all motion sensors for north America based on **TITLE 24, DLC NLC 5.0** and give 5 years warranty for all motion sensors, and all motion sensors with copy right in USA. Our CASAMBI-enabled Bluetooth sensors is also **Bluetooth SIG Qualified.**

The **CASAMBI** technology provides a mesh network where all the intelligence of the system is replicated in every nodeand, in such a way, creates a system with no single point of failure. In this kind of fully distributed architecture, any unit can go offline and catch up from others when they return back online.

Table of Content

PIR SENSOR

10-14V/12-24V & 120-277V

10-14V / 12-24V

ANT-1P-4T-BLE-CB ---------- 1
ANT-1P-5T-BLE-CB ---------- 3
ANT-4D-BLE-CB ---------- 5
ANT-4E-BLE-CB ---------- 7
ANT-4E-BLE-CB-R2 ---------- 9
ANT-6-4T-BLE-CB ---------- 11
ANT-6-ZT-BLE-CB ---------- 13
ANT-6-Z10-BLE-CB ---------- 15
ANT-6-4R-BLE-CB ---------- 17
ANT-6-4H-BLE-CB ---------- 19
ANT-703P-A-BLE-CB ---------- 21
ANT-703P-C-BLE-CB ---------- 23
ANT-12P-BLE-CB ---------- 25
ANT-15P-BLE-CB ---------- 27
ANT-15P-1-BLE-CB ---------- 29
BRI619-BLE-CB ---------- 31

120-277VAC

BRI819P-B-D-BLE-CB ---------- 33
BRI823-B-D-BLE-CB ---------- 35
BRI823-X-D-BLE-CB ---------- 37
BRI-VOS201-BLE-CB ---------- 39
SK701P-BLE-CB ---------- 41

MICROWAVE SENSOR

10-14V/12-24V

10-14V / 12-24V

ANT-3D-BLE-CB ---------- 43
ANT-7-BLE-CB ---------- 45
ANT-7D-BLE-CB ---------- 47
ANT-5-4T-BLE-CB ---------- 49
ANT-5-ZT-BLE-CB ---------- 51
ANT-5-Z10-BLE-CB ---------- 53
ANT-5-4R-BLE-CB ---------- 55
ANT-5-4H-BLE-CB ---------- 57

CASAMBI SHARKWARD

FIXTURE CONTROLLER

10-14V/12-24V

10-14V / 12-24V

ANT-5-Z10-CON-BLE-CB ---------- 59
ANT-5-ZT-CON-BLE-CB ---------- 61
ANT-11-CON-BLE-CB ---------- 63
SK104-CON-BLE-CB ---------- 65
BRI620-CON-BLE-CB ---------- 67

CEILING SENSOR

12-24V

12-24V

BRI-CMP305-LV-BLE-CB ---------- 69
BRI-DT301P-BLE-CB ---------- 71
BRI-DT301-BLE-CB ---------- 73

DALI BLE SENSOR

10-14V/DALI BUS

10-14V/DALI BUS

ANT-15P-3-BLE-CB-D4I ---------- 75
ANT-4E-BLE-CB-D ---------- 77
ANT-5-ZT-BLE-CB-D ---------- 79
ANT-6-ZT-BLE-CB-D ---------- 81
BRI-CMP305-LV-BLE-CB-D ---------- 83

DIMMER WALL SWITCH

220-240V/12V

120VAC

BC-USDM101-3-CB ---------- 87
BRI-WS204-CB ---------- 89
BC-USDM101-4-CB ---------- 91
BC-USUSB101-3-CB ---------- 93

GATEWAY

220-240V/12V

GT-001-CB ---------- 95
BRI819-G-BLE-CB ---------- 96

ANT-1P-4T-BLE-CB

SPECIFICATION

The ANT-1P-4T-BLE-CB uses PIR motion detector architecture and passive infrared (PIR) technology for improved detection coverage for Low bay applications.

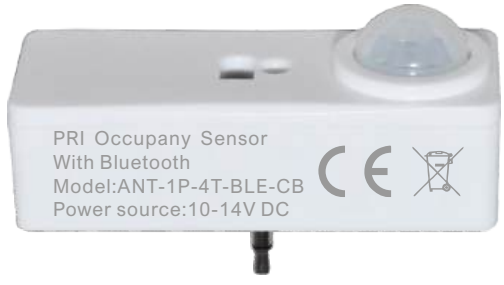

Sharkward Bluetooth®

Technology Partner CASAMBI

OVERVIEW

- PIR sensor.
- Bluetooth® SIG mesh.
- High-End Trim, Zoning, Continuous Bi-level Dimming.
- LED Motion indicator.
- Mounting height up to 12 ft .
- 360° coverage pattern.
- Low Voltage connector.

TECHNICAL DATA

Motion Sensor	Passive infrared sensor
Input Power	10-14VDC,>50mA
Control Output	0-10V,max 25mA sinking current
Mounting height	12ft Max.
Detection angle	360°
Operating temperature	-20°C-60°C
IP rating	20
Max Bluetooth Range	100ft(30m)
Warranty	5years

ORDERING INFORMATION

ANT-1P-4T-BLE-CB Bluetooth Passive Infrared sensor

DIMENSIONS AND APPEARANCE

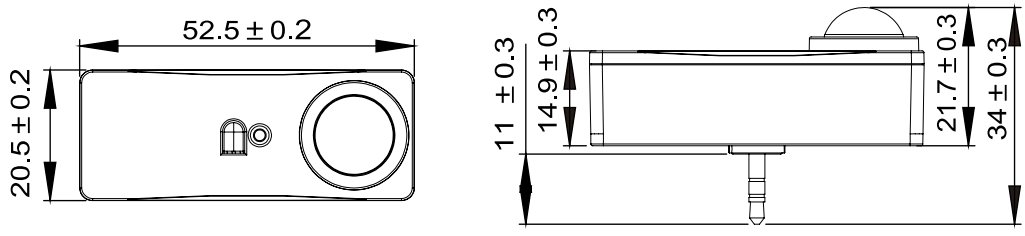

OCCUPANCY DETECTION OVERLAP

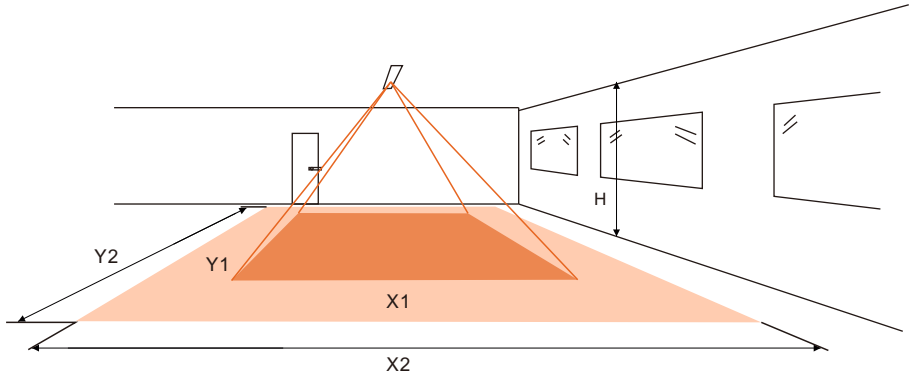

Height	Minor Movement		Major Movement	
H	Y1	X1	Y2	X2
8'/2.4m	10'/2.9m	9'/2.7m	15'/4.5m	10'/2.9m
10'/3m	12'/3.6m	11'/3.4m	18'/5.4m	12'/3.6m

Note: Longer dimension of detection area (Y1, Y2) is parallel to longer dimension.

WIRING DIAGRAM

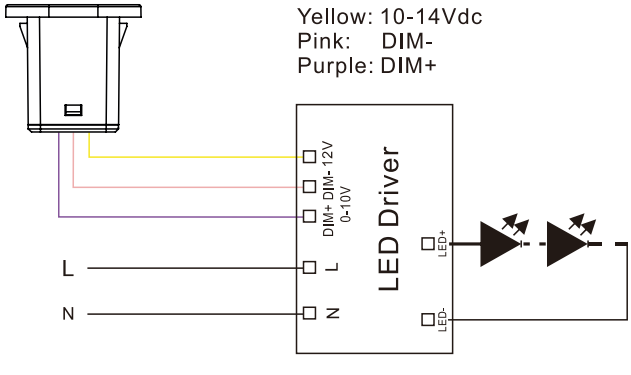

ANT-1P-5T-BLE-CB

SPECIFICATION

The ANT-1P-5T-BLE-CB uses PIR motion detector architecture and passive infrared (PIR) technology for improved detection coverage for low bay applications.

Sharkward Bluetooth®

Technology Partner CASAMBI

OVERVIEW

- PIR sensor.
- Bluetooth® SIG mesh.
- High-End Trim, Zoning, Continuous Bi-level Dimming.
- LED Motion indicator.
- Mounting height up to 12ft(4m) .
- 360° coverage pattern.
- Low Voltage connector.

TECHNICAL DATA

Motion Sensor	Passive infrared sensor
Input Power	10-14VDC,>50mA
Control Output	0-10V,max 25mA sinking current
Mounting height	12ft(4m) Max.
Detection angle	360°
Operating temperature	-20°C-60°C
IP rating	20
Max Bluetooth Range	100ft(30m)
Warranty	5years

ORDERING INFORMATION

ANT-1P-5T-BLE-CB Bluetooth Passive Infraed Sensor

DIMENSIONS AND APPEARANCE

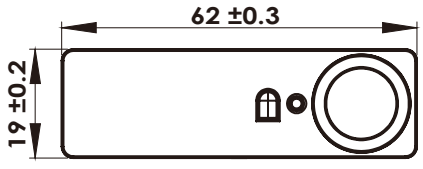

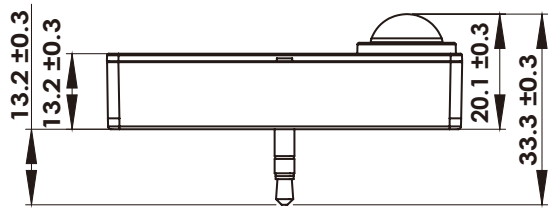

OCCUPANCY DETECTION OVERLAP

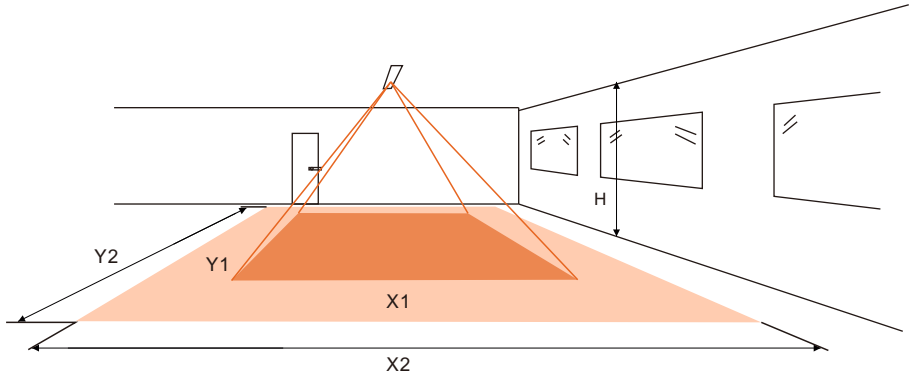

Height	Minor Movement		Major Movement	
H	Y1	X1	Y2	X2
8'/2.4m	10'/2.9m	9'/2.7m	15'/4.5m	10'/2.9m
10'/3m	12'/3.6m	11'/3.4m	18'/5.4m	12'/3.6m

Note: Longer dimension of detection area (Y1, Y2) is parallel to longer dimension.

WIRING DIAGRAM

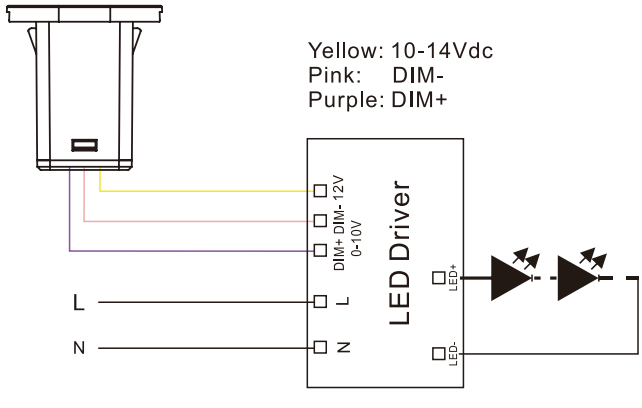

ANT-4D-BLE-CB

SPECIFICATION

The ANT-4D-BLE-CB uses PIR motion detector architecture and passive infrared (PIR) technology for improved detection coverage for high bay applications.

Sharkward Bluetooth®

Technology Partner CASAMBI

OVERVIEW

- PIR sensor.
- Bluetooth® SIG mesh.
- High-End Trim, Zoning, Continuous Bi-level Dimming.
- LED Motion indicator.
- Mounting height up to 40ft(12m) .
- 360° coverage pattern.
- Low Voltage connector.

TECHNICAL DATA

Motion Sensor	Passive infrared sensor
Input Power	10-14VDC,>50mA
Control Output	0-10V,max 25mA sinking current
Mounting height	40ft(12m) Max.
Detection angle	360°
Operating temperature	-20°C~60°C
Max Bluetooth Range	100ft(30m)
Warranty	5years

ORDERING INFORMATION

ANT-4D-BLE-CB Bluetooth Passive Infrared sensor

DIMENSIONS AND APPEARANCE

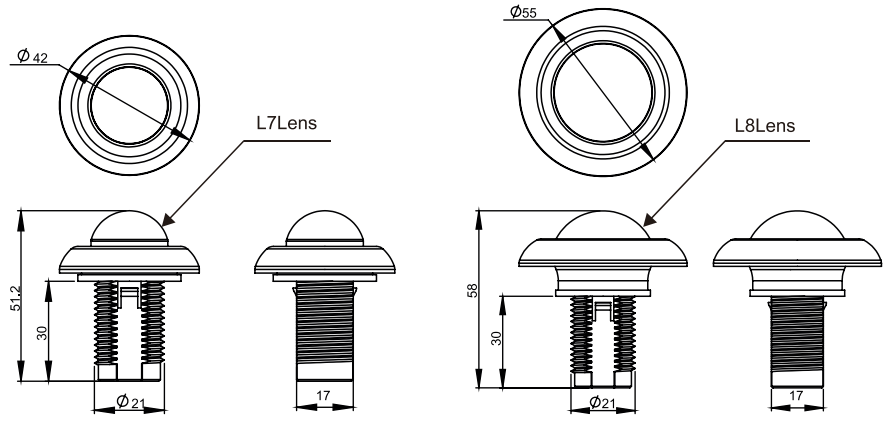

Unit:mm

OCCUPANCY DETECTION OVERLAP

L7 Lens

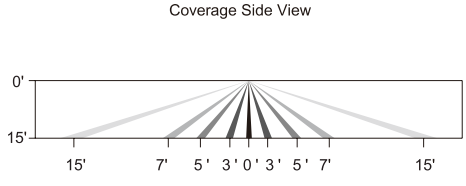

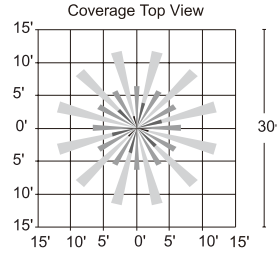

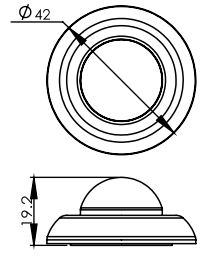

L8 Lens

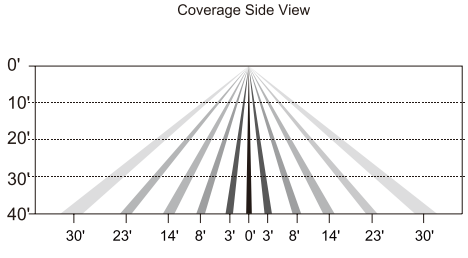

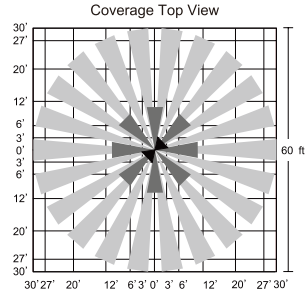

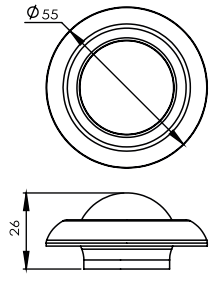

WIRING DIAGRAM

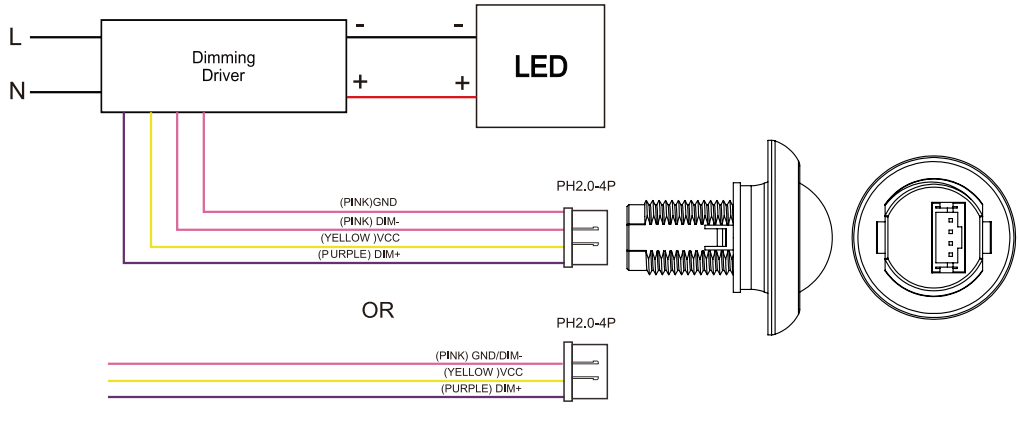

ANT-4E-BLE-CB

SPECIFICATION

The ANT-4E-BLE-CB uses PIR motion detector architecture and passive infrared (PIR) technology for improved detection coverage for high bay applications.

Sharkward Bluetooth®

Technology Partner CASAMBI

OVERVIEW

- PIR sensor.
- Daylight Harvesting
- Bluetooth® SIG mesh.
- High-End Trim, Zoning, Continuous Bi-level Dimming.
- LED Motion indicator.
- Mounting height up to 12 ft .
- 360° coverage pattern.
- Low Voltage connector.

TECHNICAL DATA

Motion Sensor	Passive infrared sensor
Input Power	10-14VDC,>50mA
Control Output	0-10V,max 25mA sinking current
Mounting height	12ft Max.
Detection angle	360°
Operating temperature	-20°C-60°C
Max Bluetooth Range	100ft(30m)
Warranty	5years

ORDERING INFORMATION

ANT-4E-BLE-CB Bluetooth Passive Infrared sensor

DIMENSIONS AND APPEARANCE

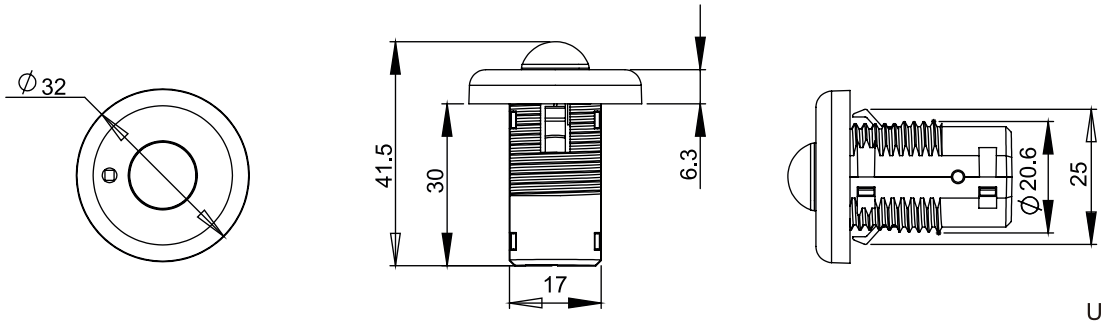

Unit:mm

OCCUPANCY DETECTION OVERLAP

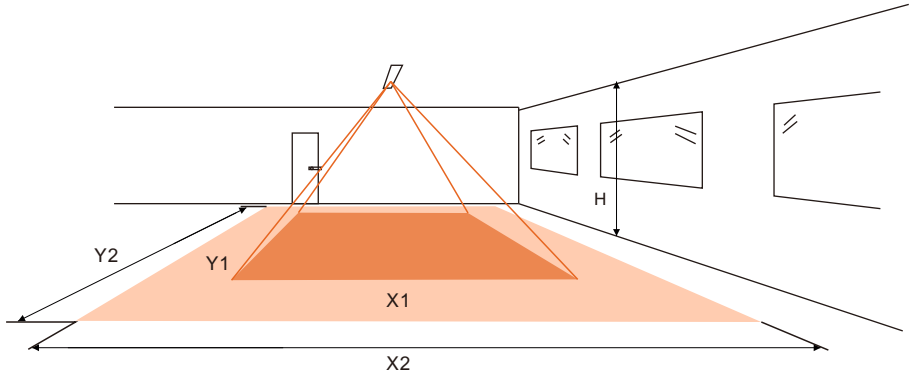

Height	Minor Movement		Major Movement	
H	Y1	X1	Y2	X2
8'/2.4m	10'/2.9m	9'/2.7m	15'/4.5m	10'/2.9m
10'/3m	12'/3.6m	11'/3.4m	18'/5.4m	12'/3.6m

Note: Longer dimension of detection area (Y1, Y2) is parallel to longer dimension.

WIRING DIAGRAM

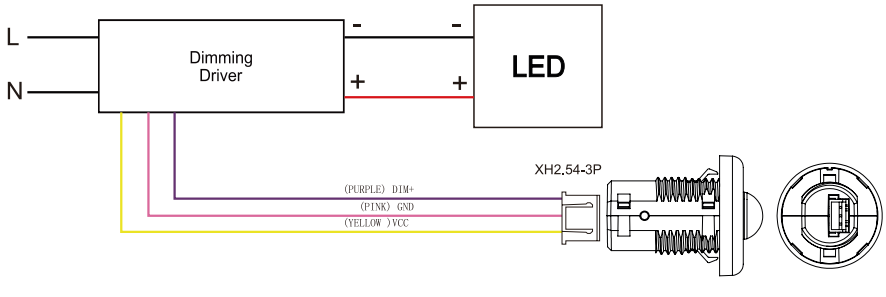

ANT-4E-BLE-CB-R2

SPECIFICATION

ANT.4E-BLE-CB-R2 uses PIR motion detector architecture and passive infrared (PIR) technology for improved detection coveragefor low bay applications.

Sharkward Bluetooth®

Technology Partner CASAMBI

OVERVIEW

- PIR sensor.
- Daylight Harvesting
- Bluetooth® SIG mesh.
- High-End Trim, Zoning, Continuous Bi-level Dimming.
- LED Motion indicator.
- Mounting height up to 12 ft .
- 360° coverage pattern.
- Low Voltage connector.

TECHNICAL DATA

Motion Sensor	Passive infrared sensor
Input Power	10-14VDC,>50mA
Control Output	0-10V,max 25mA sinking current
Mounting height	12ft Max.
Detection angle	360°
Operating temperature	-20°C-70°C
Max Bluetooth Range	100ft(30m)
Warranty	5years

ORDERING INFORMATION

ANT-4E-BLE-CB-R2 DC Fixture-Integrated Bluetooth PIR Sensor

DIMENSIONS AND APPEARANCE

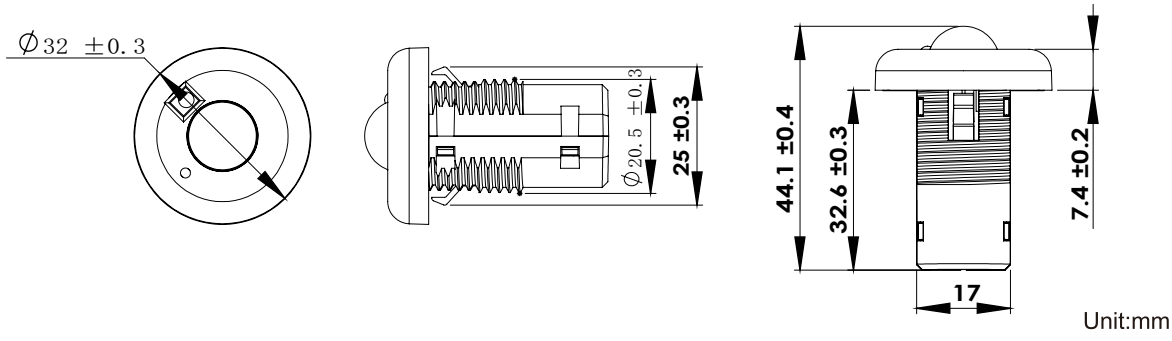

OCCUPANCY DETECTION OVERLAP

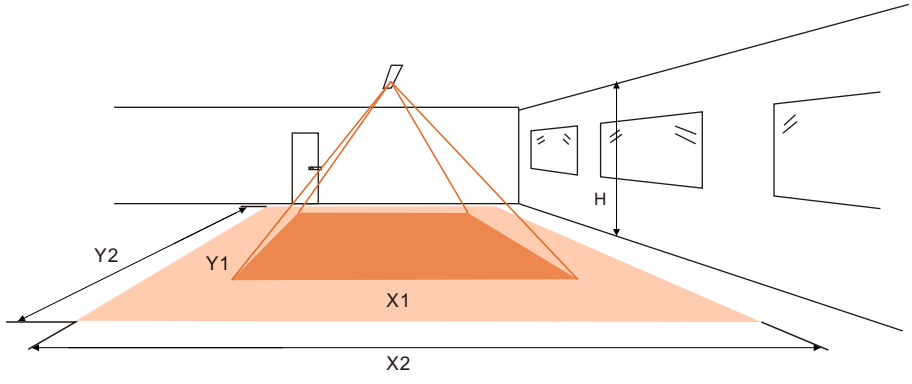

Height	Minor Movement		Major Movement	
H	Y1	X1	Y2	X2
8'/2.4m	10'/2.9m	9'/2.7m	15'/4.5m	10'/2.9m
10'/3m	12'/3.6m	11'/3.4m	18'/5.4m	12'/3.6m

Note: Longer dimension of detection area (Y1, Y2) is parallel to longer dimension.

WIRING DIAGRAM

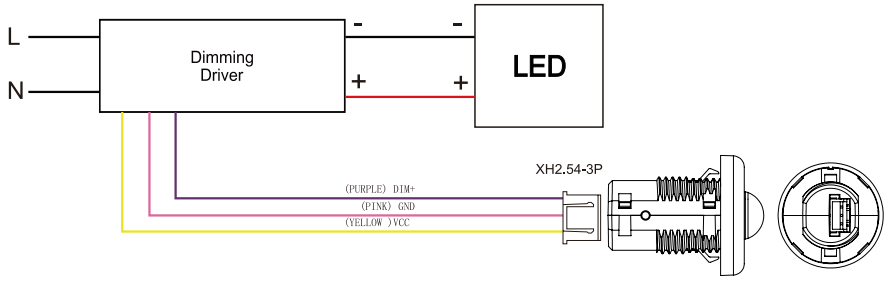

ANT-6-4T-BLE-CB

SPECIFICATION

The ANT-6-4T-BLE-CB uses PIR motion detector architecture and passive infrared (PIR) technology for improved detection coverage for high bay applications.

Sharkward Bluetooth®

Technology Partner CASAMBI

OVERVIEW

- PIR sensor.
- Daylight Harvesting
- Bluetooth® SIG mesh.
- High-End Trim, Zoning, Continuous Bi-level Dimming.
- LED Motion indicator.
- Mounting height up to 40 ft .
- 360° coverage pattern.
- Low Voltage connector.

TECHNICAL DATA

Motion Sensor	Passive infrared sensor
Input Power	12-24VDC,>50mA
Control Output	0-10V,max 25mA sinking current
Mounting height	40ft(12m) Max.
Detection angle	360°
Operating temperature	-20°C~60°C
IP rating	65
Max Bluetooth Range	200ft(60m)
Warranty	5years

ORDERING INFORMATION

ANT-6-4T-BLE-CB Bluetooth Passive Infrared sensor

DIMENSIONS AND APPEARANCE

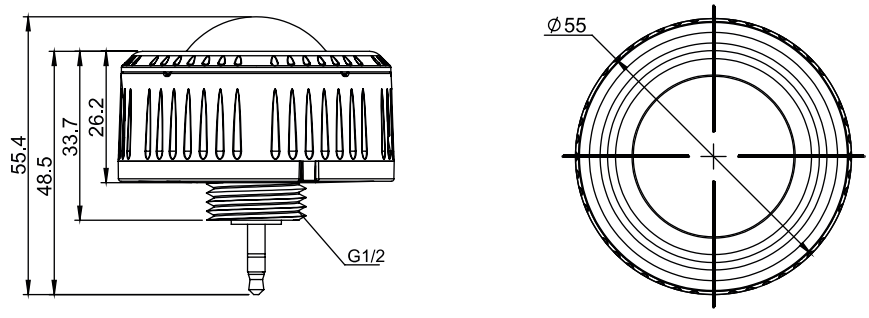

Unit:mm

OCCUPANCY DETECTION OVERLAP

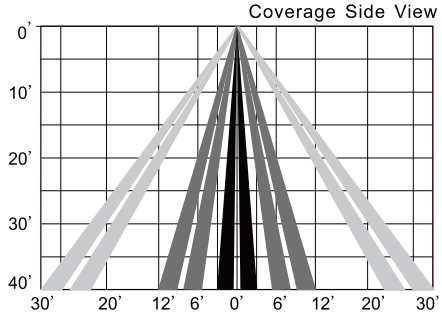

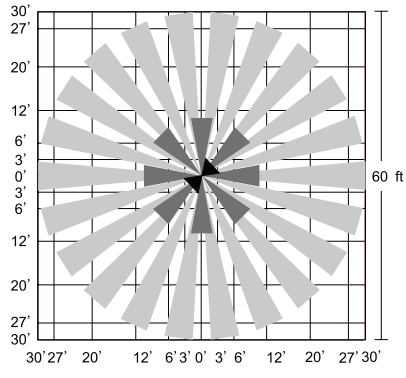

WIRING DIAGRAM

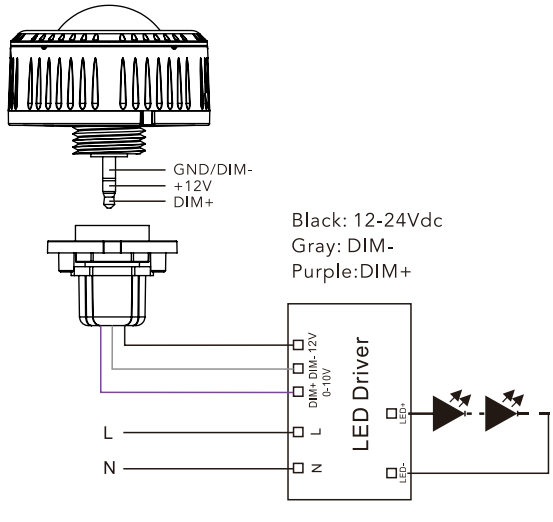

ANT-6-ZT-BLE-CB

SPECIFICATION

The ANT-6-ZT-BLE-CB uses PIR motion detector architecture and passive infrared (PIR) technology for improved detection coverage for high bay applications.

Sharkward Bluetooth®

Technology Partner CASAMBI

OVERVIEW

- PIR sensor.
- Daylight Harvesting
- Bluetooth® SIG mesh.
- High-End Trim, Zoning, Continuous Bi-level Dimming.
- LED Motion indicator.
- Mounting height up to 40 ft .
- 360° coverage pattern.
- Low Voltage connector.

TECHNICAL DATA

Motion Sensor	Passive infrared sensor
Input Power	12-24VDC,>50mA
Control Output	0-10V,max 25mA sinking current
Mounting height	40ft(12m) Max.
Detection angle	360°
Operating temperature	-20°C~60°C
IP rating	65
Max Bluetooth Range	200ft(60m)
Warranty	5years

ORDERING INFORMATION

ANT-6-ZT-BLE-CB Casambi Zhaga Bluetooth Passive Infrared Sensor

DIMENSIONS AND APPEARANCE

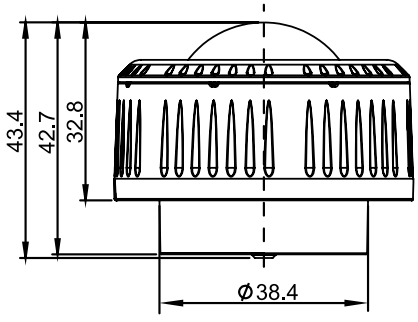

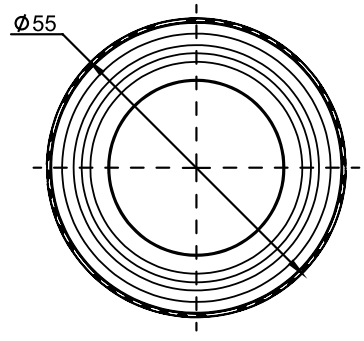

Unit:mm

OCCUPANCY DETECTION OVERLAP

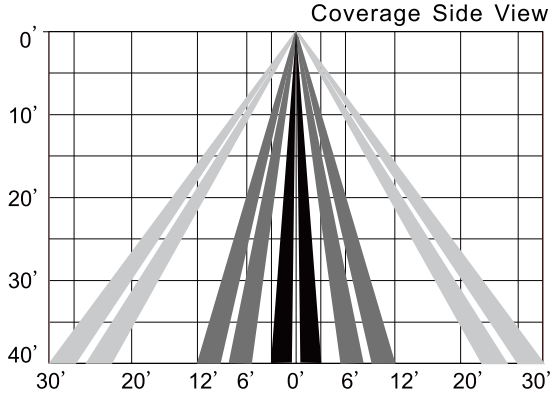

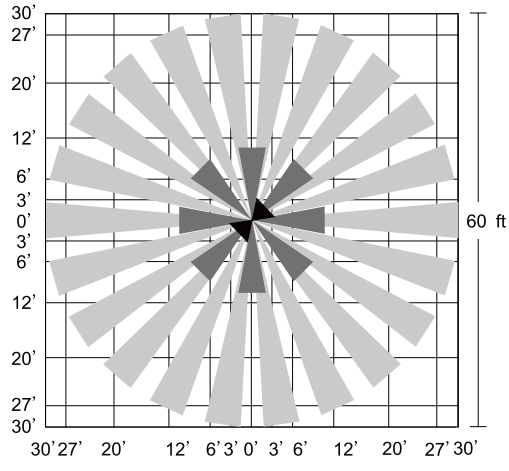

WIRING DIAGRAM

— Port 1 : 12-24Vdc
— Port 2 : GND/DIM -
— Port 3 : DIM +
— Port 4 : NC

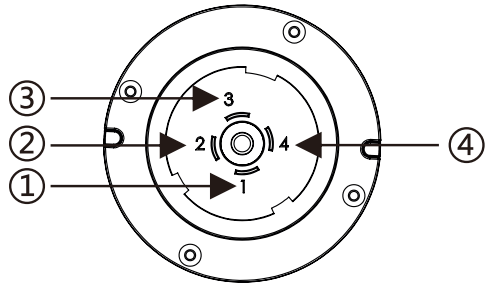

ANT-6-Z10-BLE-CB

SPECIFICATION

The ANT-6-Z10-BLE-CB uses PIR motion detector architecture and passive infrared (PIR) technology for improved detection coverage for high bay applications.

Sharkward Bluetooth®

Technology Partner CASAMBI

OVERVIEW

- PIR sensor.
- Bluetooth® SIG mesh.
- High-End Trim, Zoning, Continuous Bi-level Dimming.
- LED Motion indicator.
- Mounting height up to 40 ft .
- 360° coverage pattern.
- Low Voltage connector.

TECHNICAL DATA

Motion Sensor	Passive infrared sensor
Input Power	12-24VDC,>50mA
Control Output	0-10V,max 25mA sinking current
Mounting height	40ft(12m) Max.
Detection angle	360°
Operating temperature	-20°C~60°C
IP rating	65
Max Bluetooth Range	200ft(60m)
Warranty	5years

ORDERING INFORMATION

ANT-6-Z10-BLE-CB Z10 Bluetooth Passive Infrared sensor

DIMENSIONS AND APPEARANCE

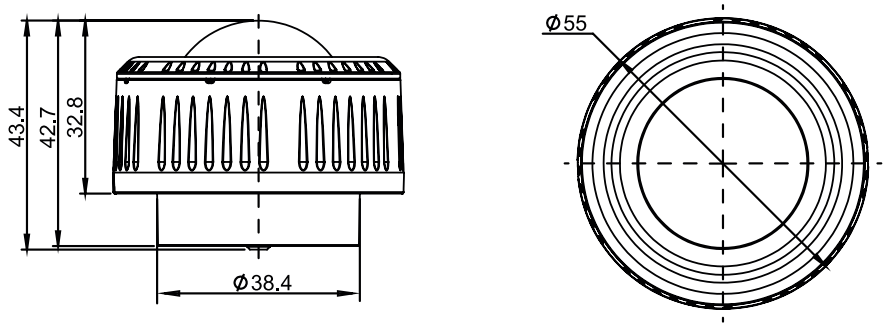

Unit:mm

OCCUPANCY DETECTION OVERLAP

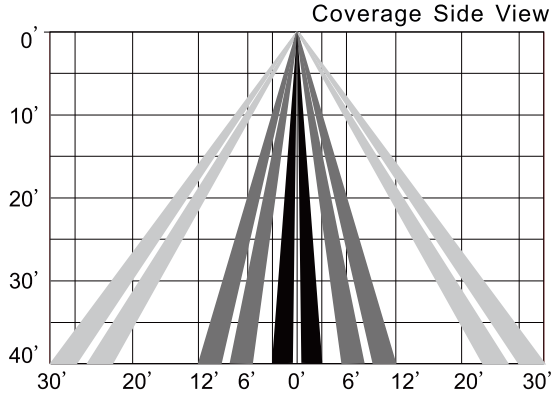

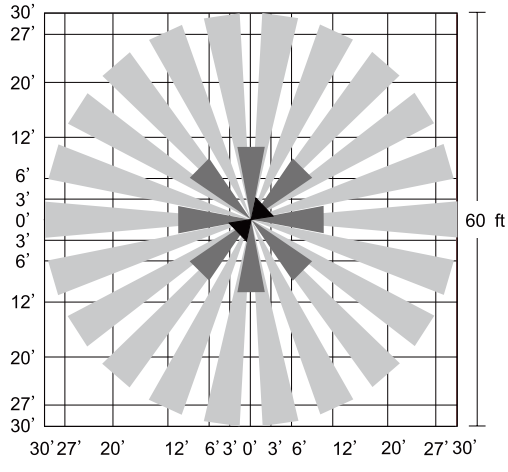

WIRING DIAGRAM

— Port 1 : 12-24Vdc
— Port 2 : GND/DIM -
— Port 3 : DIM +
— Port 4 : NC

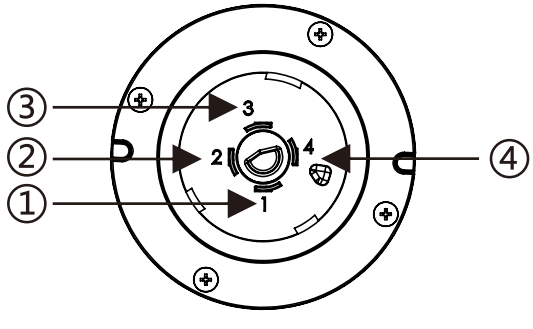

ANT-6-4R-BLE-CB

SPECIFICATION

The ANT-6-4R-BLE-CB uses PIR motion detector architecture and passive infrared (PIR) technology for improved detection coverage for high bay applications.

Sharkward Bluetooth®

Technology Partner CASAMBI

OVERVIEW

- PIR sensor.
- Daylight Harvesting
- Bluetooth® SIG mesh.
- High-End Trim, Zoning, Continuous Bi-level Dimming.
- LED Motion indicator.
- Mounting height up to 40 ft .
- 360° coverage pattern.
- Low Voltage connector.

TECHNICAL DATA

Motion Sensor	Passive infrared sensor
Input Power	12-24VDC,>50mA
Control Output	0-10V,max 25mA sinking current
Mounting height	40ft(12m) Max.
Detection angle	360°
Operating temperature	-20°C~60°C
Max Bluetooth Range	200ft(60m)
Warranty	5years

ORDERING INFORMATION

ANT-6-4R-BLE-CB 3PIN(Short) Bluetooth Passive Infrared sensor

DIMENSIONS AND APPEARANCE

Unit:mm

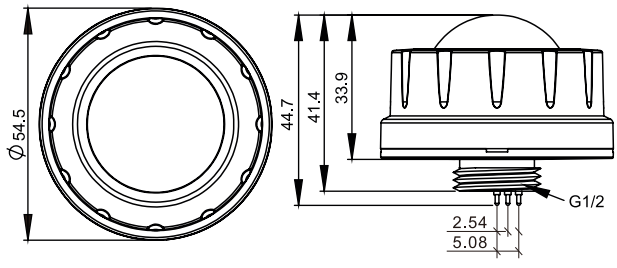

ANT-6-4R-BLE-GE(sensor)

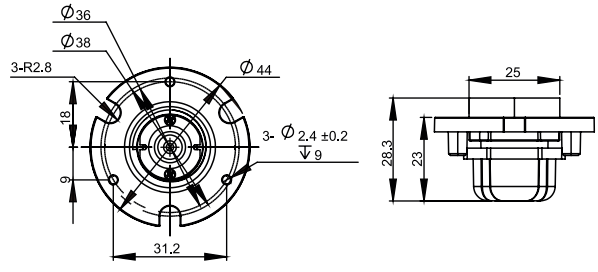

ANT-5-4S(receptacle)

OCCUPANCY DETECTION OVERLAP

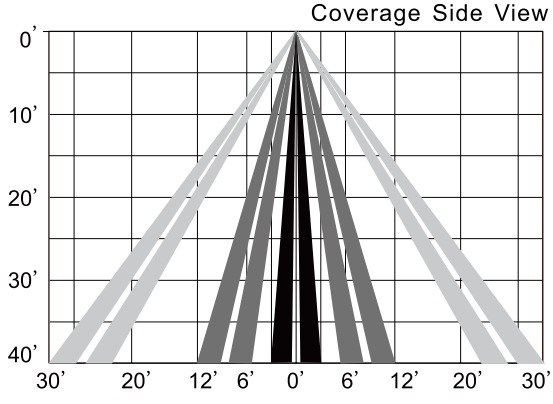

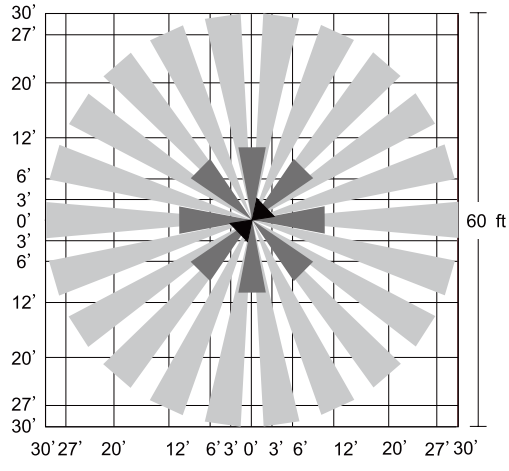

WIRING DIAGRAM

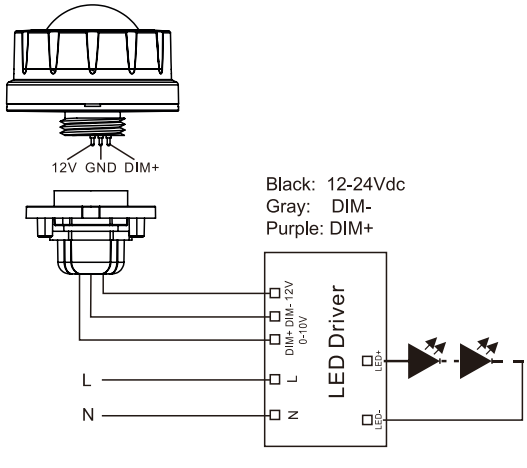

ANT-6-4H-BLE-CB

SPECIFICATION

The ANT-6-4H-BLE-CB uses PIR motion detector architecture and passive infrared (PIR) technology for improved detection coverage for high bay applications.

Sharkward Bluetooth®

Technology Partner CASAMBI

OVERVIEW

- PIR sensor.
- Bluetooth®SIG mesh.
- High-End Trim, Zoning, Continuous Bi-level Dimming.
- LED Motion indicator.
- Mounting height up to 40 ft .
- 360° coverage pattern.
- Low Voltage connector.

TECHNICAL DATA

Motion Sensor	Passive infrared sensor
Input Power	12-24VDC,>50mA
Control Output	0-10V,max 25mA sinking current
Mounting height	40ft(12m) Max.
Detection angle	360°
Operating temperature	-20°C~60°C
IP rating	65
Max Bluetooth Range	200ft(60m)
Warranty	5years

ORDERING INFORMATION

ANT-6-4H-BLE-CB 3PIN Bluetooth Passive Infrared sensor

DIMENSIONS AND APPEARANCE

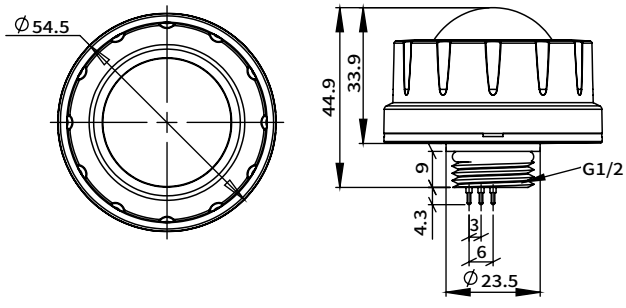

ANT-6-4H-BLE-GE(sensor)

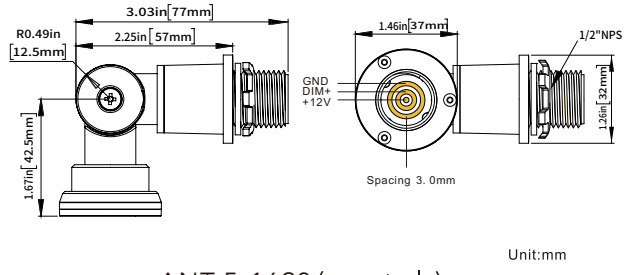

ANT-5-16S3 (receptacle)

OCCUPANCY DETECTION OVERLAP

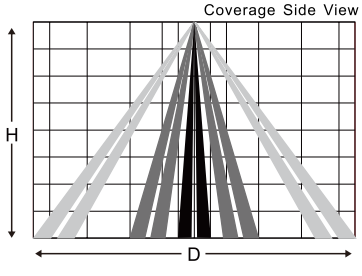

Minor Motion

Major Motion

Height	Rang Diameter(D)			
H(ft)	Sensitivity 100%(ft)	Sensitivity 75%(ft)	Sensitivity 50%(ft)	Sensitivity 25%(ft)
40	40	20	0	0
30	50	40	5	0
20	40	40	20	10
10	40	40	40	20

Maximum mounting use 40ft.
Recommend mounting use 30-35ft.
The detection area for movement sensor can be roughly divided into two parts:
Minor movement (person moving < 3.0'/s or 0.9m/s)
Major movement (person moving > 3.0'/s or 0.9m/s)

WIRING DIAGRAM

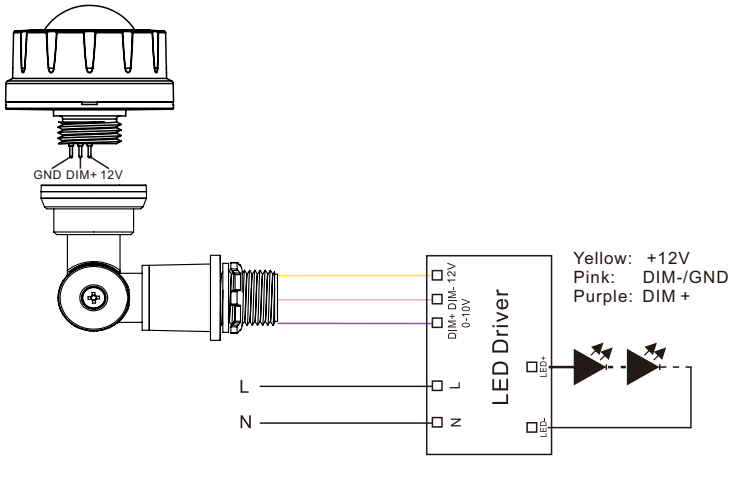

ANT-703P-A-BLE-CB

SPECIFICATION

The ANT-703P-A-BLE-CB mounts in an outdoor lighting fixture and provides multi-level control based on motion and/or daylight contribution. It controls 0-10 VDC LED drivers or dimming ballasts, and is rated for wet and cold locations. All control parameters are adjustable via a wireless configuration tool capable of storing.

Sharkward Bluetooth®

Technology Partner CASAMBI

OVERVIEW

- PIR sensor.
- Daylight Harvesting
- Bluetooth®SIG mesh.
- High-End Trim, Zoning, Continuous Bi-level Dimming.
- LED Motion indicator.
- Mounting height up to 40ft(12m).
- 360° coverage pattern.
- Low Voltage connector.

TECHNICAL DATA

Motion Sensor	Passive infrared sensor
Input Power	12V-24V DC, >50mA
Control Output	0-10V,max 25mA sinking current
Mounting height	L7 Lens(low bay) 13ft(4m) Max / L8 Lens(high bay) 40ft(12m)
Detection angle	360°
Operating temperature	-20°C~60°C
Max Bluetooth Range	200ft(60m)
Warranty	5years

ORDERING INFORMATION

ANT-703P-A-BLE-CB Bluetooth Passive Infrared sensor

DIMENSIONS AND APPEARANCE

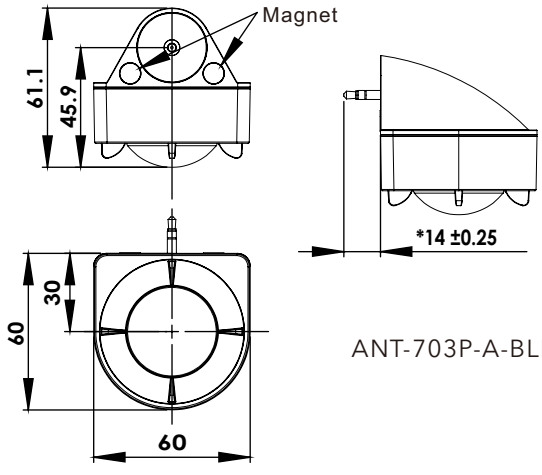

ANT-703P-A-BLE-CB (sensor)

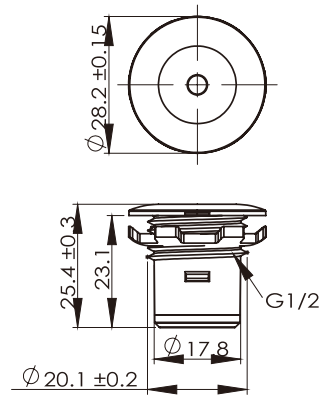

ANT-5-22B(connecting base) Unit:mm

OCCUPANCY DETECTION OVERLAP

L7 Lens

Low Bay 360°

Top View

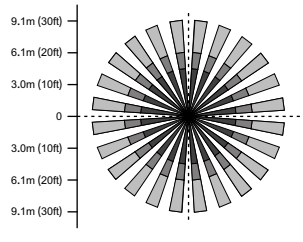

Side View

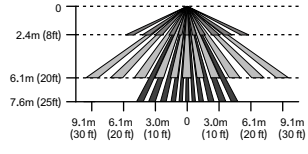

L8 Lens

High Bay 360°

Top View

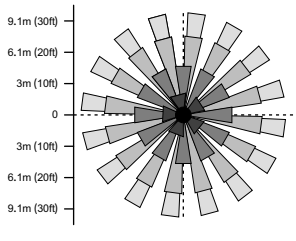

Side View

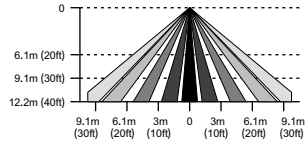

WIRING DIAGRAM

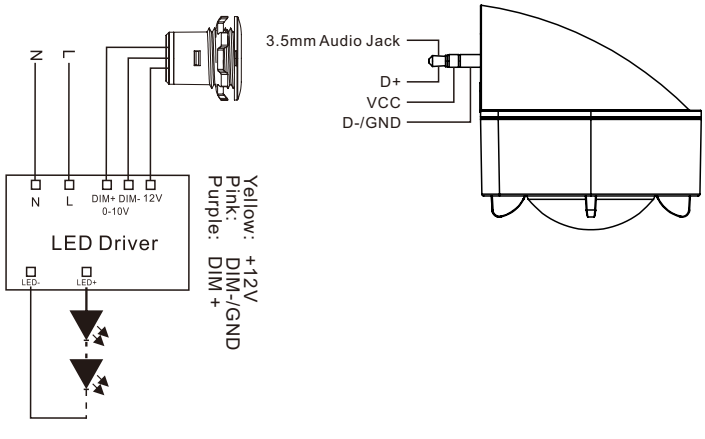

ANT-703P-C-BLE-CB

SPECIFICATION

The ANT-703P-C-BLE-CB mounts in an outdoor lighting fixture and provides multi-level control based on motion and/or daylight contribution. It controls 0-10 VDC LED drivers or dimming ballasts, and is rated for wet and cold locations.

Sharkward Bluetooth®

Technology Partner CASAMBI

OVERVIEW

- PIR sensor.
- Daylight Harvesting
- Bluetooth®SIG mesh.
- High-End Trim, Zoning, Continuous Bi-level Dimming.
- LED Motion indicator.
- Mounting height up to 40ft(12m).
- 360° coverage pattern.
- Low Voltage connector.

TECHNICAL DATA

Motion Sensor	Passive infrared sensor
Input Power	12V-24V DC, >50mA
Control Output	0-10V,max 25mA sinking current
Mounting height	L7 Lens(low bay) 13ft(4m) Max / L8 Lens(high bay) 40ft(12m)
Detection angle	360°
Operating temperature	-20°C~60°C
Max Bluetooth Range	200ft(60m)
Warranty	5years

ORDERING INFORMATION

ANT-703P-C-BLE-CB Bluetooth Passive Infrared sensor

DIMENSIONS AND APPEARANCE

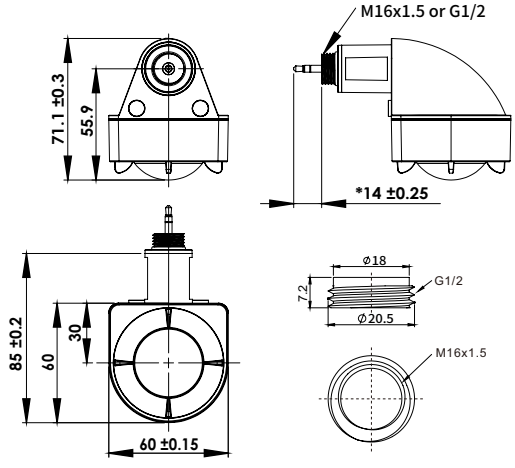

ANT-703P-A-BLE-GE(sensor)

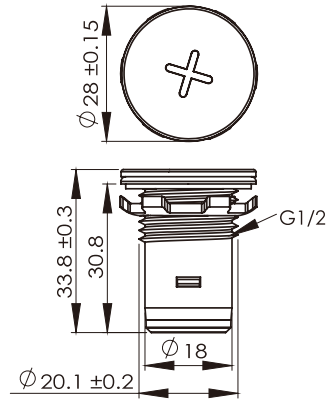

ANT-5-21B(connecting base)

Unit:mm

OCCUPANCY DETECTION OVERLAP

L7 Lens

Low Bay 360°

Top View

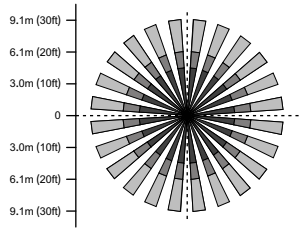

Side View

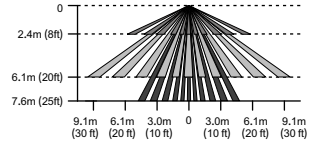

L8 Lens

High Bay 360°

Top View

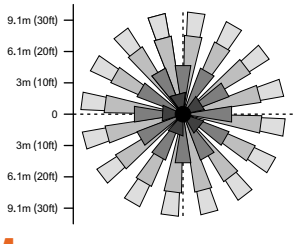

Side View

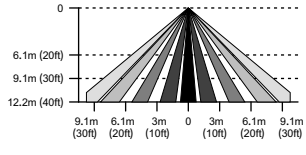

WIRING DIAGRAM

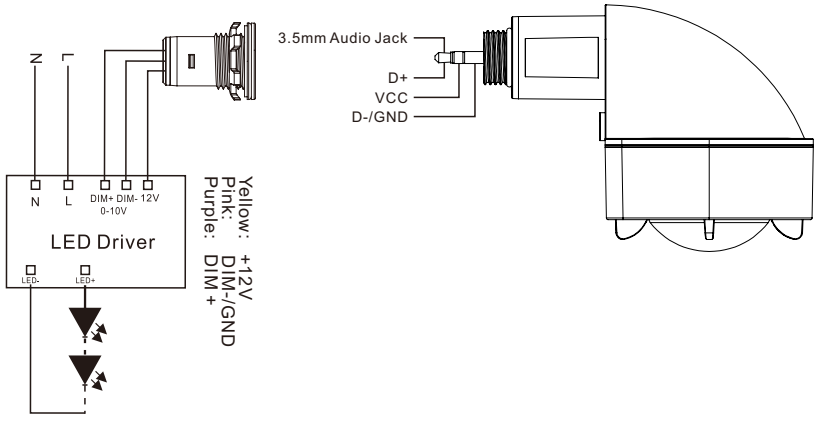

ANT-12P-BLE-CB

SPECIFICATION

The ANT-12P-BLE-CB uses PIR motion detector architecture and passive infrared (PIR) technology for improved detection coverage applications.

Sharkward Bluetooth®

Technology Partner CASAMBI

OVERVIEW

- PIR sensor.
- Bluetooth® SIG mesh.
- High-End Trim, Zoning, Continuous Bi-level Dimming.
- LED Motion indicator.
- Mounting height up to 12 ft (4m) .
- 360° coverage pattern.
- Low Voltage connector.

TECHNICAL DATA

Motion Sensor	Passive infrared sensor
Input Power	LED Input : Max . 100VDC 1A; Sensor Input: 10-14VDC, >100mA
Sinking Current	Max. 25mA
Control Output	LED output : Max . 100VDC 1A; 0-10V output signals for dimming
Mounting height	12ft(4m) Max.
Detection radius/angle	Max 15ft.(4.5m) /360°
Operating temperature	-20°C~60°C
Max Bluetooth Range	100ft(30m)
Wireless Standards	5.0 Bluetooth Mesh

ORDERING INFORMATION

ANT-12P-BLE-CB Tunable DC Bluetooth PIR Sensor

DIMENSIONS AND APPEARANCE

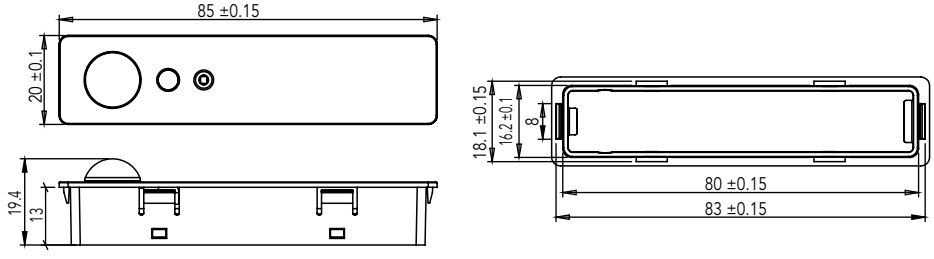

Unit:mm

OCCUPANCY DETECTION OVERLAP

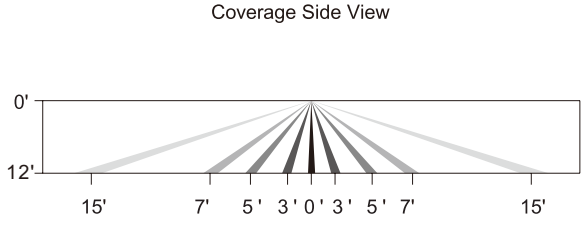

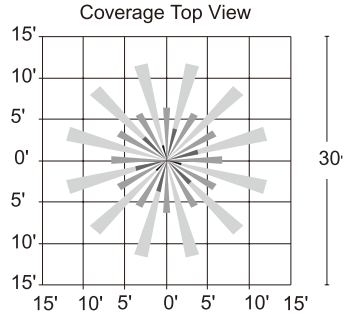

Minor Motion
Major Motion

WIRING DIAGRAM

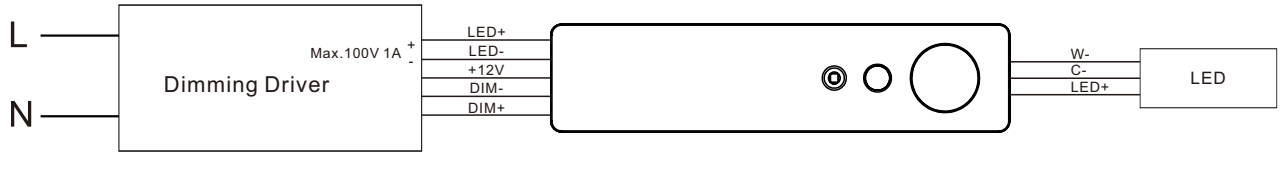

ANT-15P-BLE-CB

SPECIFICATION

The ANT-15P-BLE-CB uses PIR motion detector architecture and passive infrared (PIR) technology for improved detection coverage Low Bay applications.

Sharkward Bluetooth®

Technology Partner CASAMBI

OVERVIEW

- PIR sensor.
- Daylight Harvesting
- Bluetooth® SIG mesh.
- High-End Trim, Zoning, Continuous Bi-level Dimming.
- LED Motion indicator.
- Mounting height up to 13 ft .
- 360° coverage pattern.
- Low Voltage connector.

TECHNICAL DATA

Motion Sensor	Passive infrared sensor
Input Power	10-14VDC,>50mA
Control Output	0-10V,max 25mA sinking current
Mounting height	13ft(4m) Max.
Detection angle	360°
Operating temperature	-20°C-60°C
Max Bluetooth Range	100ft(30m)
Warranty	5years

ORDERING INFORMATION

ANT-15P-BLE-CB Bluetooth Passive Infrared sensor

DIMENSIONS AND APPEARANCE

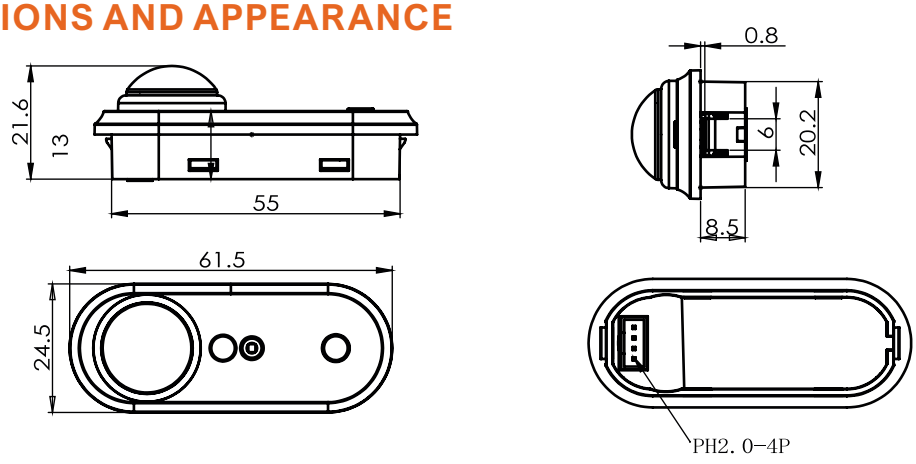

Unit:mm

OCCUPANCY DETECTION OVERLAP

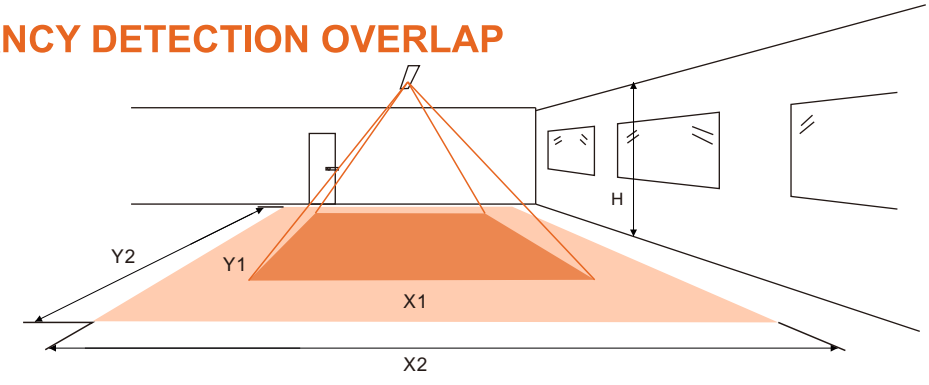

Height	Minor Movement		Major Movement	
H	Y1	X1	Y2	X2
8'/2.4m	10'/2.9m	9'/2.7m	15'/4.5m	10'/2.9m
10'/3m	12'/3.6m	11'/3.4m	18'/5.4m	12'/3.6m

Note: Longer dimension of detection area (Y1, Y2) is parallel to longer dimension.

WIRING DIAGRAM

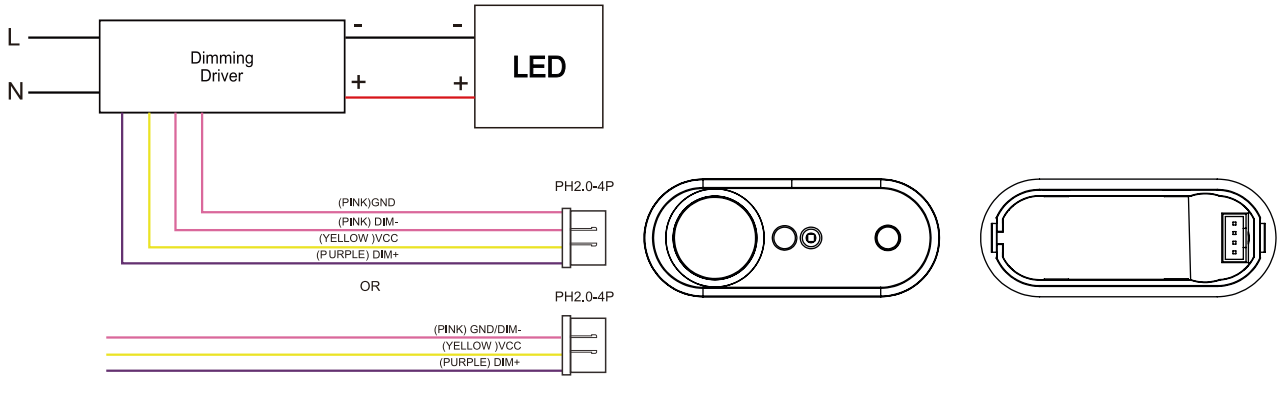

ANT-15P-1-BLE-CB

SPECIFICATION

The ANT-15P-1-BLE-CB uses PIR motion detector architecture and passive infrared (PIR) technology for improved detection coverage Low Bay applications.

Sharkward Bluetooth®

Technology Partner CASAMBI

OVERVIEW

- PIR sensor.
- Daylight Harvesting
- Bluetooth® SIG mesh.
- High-End Trim, Zoning, Continuous Bi-level Dimming.
- LED Motion indicator.
- Mounting height up to 13ft(4m) .
- 360° coverage pattern.
- Low Voltage connector.

TECHNICAL DATA

Motion Sensor	Passive infrared sensor
Input Power	10-14VDC,>50mA
Control Output	0-10V,max 25mA sinking current
Mounting height	Max.13ft(4m)
Detection angle	360°
Operating temperature	-20°C~60°C
Max Bluetooth Range	100ft(30m)
Warranty	5years

ORDERING INFORMATION

ANT-15P-1-BLE-CB Bluetooth Passive Infrared sensor

DIMENSIONS AND APPEARANCE

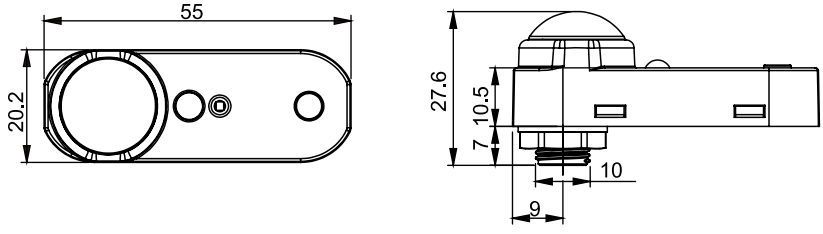

Unit:mm

OCCUPANCY DETECTION OVERLAP

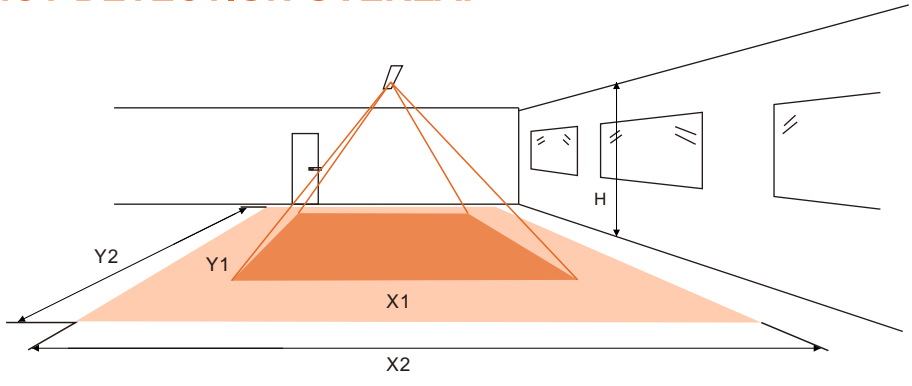

Height	Minor Movement		Major Movement	
H	Y1	X1	Y2	X2
8'/2.4m	10'/2.9m	9'/2.7m	15'/4.5m	10'/2.9m
10'/3m	12'/3.6m	11'/3.4m	18'/5.4m	12'/3.6m

Note: Longer dimension of detection area (Y1, Y2) is parallel to longer dimension.

WIRING DIAGRAM

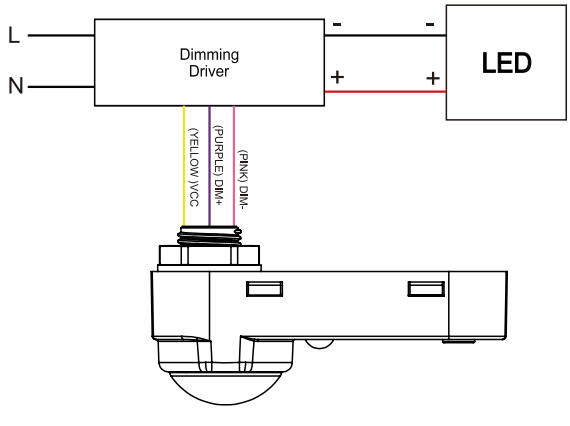

BRI619-BLE-CB

SPECIFICATION

The BRI619-BLE-CB uses PIR motion detector architecture and passive infrared (PIR) technology for improved detection coverage for low bay and high bay applications.

Sharkward Bluetooth®

Technology Partner CASAMBI

OVERVIEW

- PIR sensor.
- Bluetooth®SIG mesh.
- High-End Trim, Zoning, Continuous Bi-level Dimming.
- LED Motion indicator.
- Mounting height up to 50 ft .
- 360° coverage pattern.
- Low Voltage connector.

TECHNICAL DATA

Motion Sensor	Passive infrared sensor
Input Power	12-24VDC,>50mA
Control Output	0-10V,Max. 25mA sinking current
Mounting height	Max.50ft(15m)
Detection angle	360°
Operating temperature	-20°C-60°C
IP rating	65
Max Bluetooth Range	200ft(60m)
Warranty	5years

ORDERING INFORMATION

BRI619-BLE-CB Bluetooth Passive Infrared sensor

DIMENSIONS AND APPEARANCE

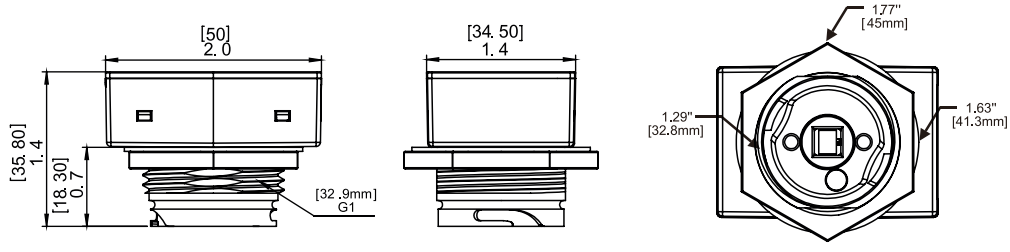

Unit:mm

OCCUPANCY DETECTION OVERLAP

L3

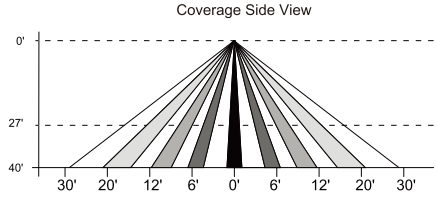

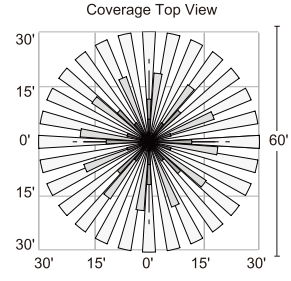

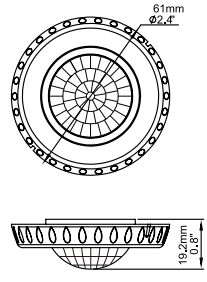

360 ° Coverage

L4

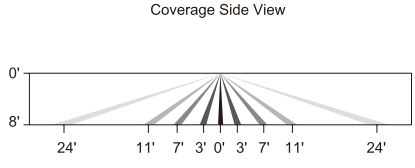

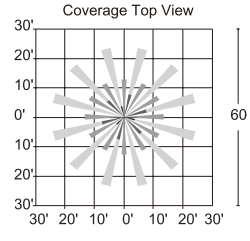

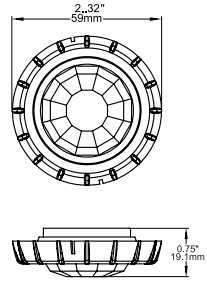

360 ° Coverage

WIRING DIAGRAM

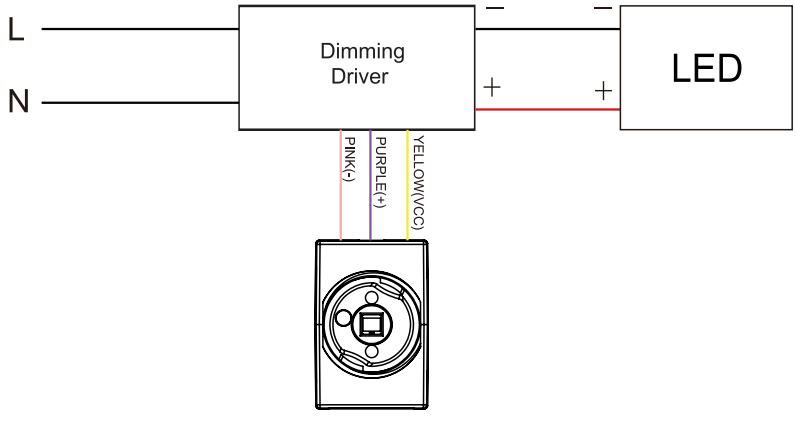

BRI819P-B-D-BLE-CB

SPECIFICATION

The BRI819P-B-D-P-BLE-CB uses PIR motion detector architecture and passive infrared (PIR) technology for improved detection coverage for low bay and high bay applications.

Sharkward Bluetooth®

Technology Partner CASAMBI

OVERVIEW

- PIR sensor.
- Bluetooth®SIG mesh.
- High-End Trim, Zoning, Continuous Bi-level Dimming.
- LED Motion indicator.
- Mounting height up to 50 ft .
- 360° coverage pattern.
- Line Voltage connector.

TECHNICAL DATA

Motion Sensing	Passive IR
Input Power	120/277VAC 50/60Hz
Control Output	0-10V,max 25mA sinking current
Maximum load	Resistive/Tungsten - 600W@120V Electronic Ballast - 800W@120V/1200W@277V
Detection angle	360°
Len L1	Max.dectection radius 30ft; Max.mounting height 25ft
Len L2	Max.dectection radius 30ft; Max.mounting height 50ft
Operating temperature	-40°F ~ +167°F (-40°C ~ +75°C)
Max Bluetooth Range	200ft(60m)
IP Rating	65
Warranty	5years

ORDERING INFORMATION

BRI819P-B-D-BLE-CB Bluetooth Passive Infrared sensor

DIMENSIONS AND APPEARANCE

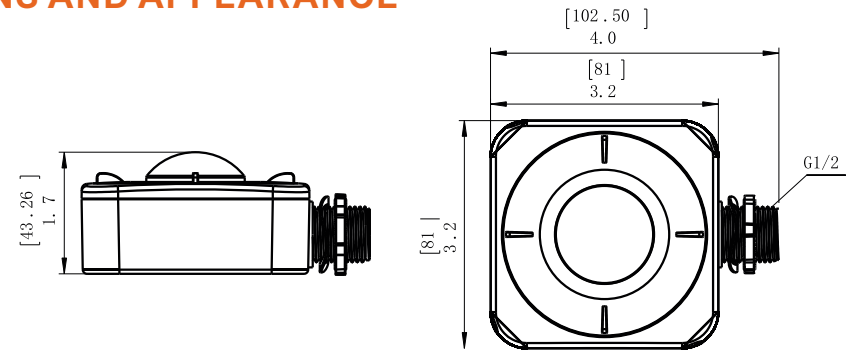

Unit:mm

OCCUPANCY DETECTION OVERLAP

L1 Len

Low Bay 360°

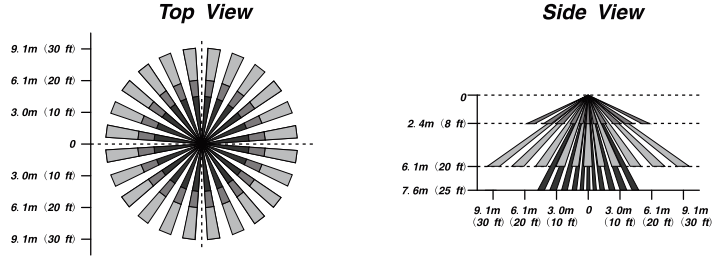

L2 Len

High Bay 360°

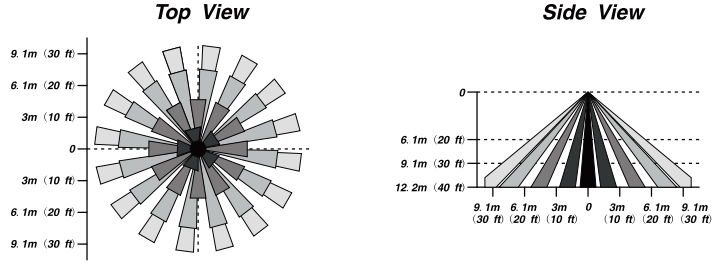

WIRING DIAGRAM

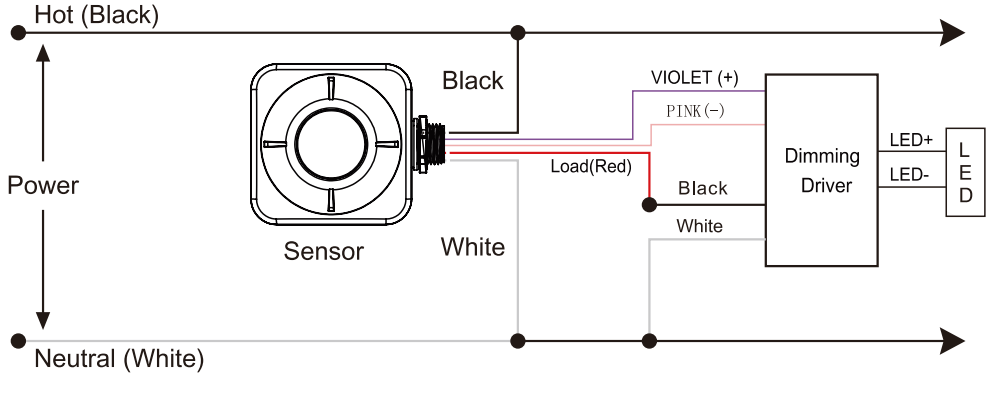

BRI823-B-D-BLE-CB

SPECIFICATION

The BRI823-B-D-BLE-CB uses PIR motion detector architecture and passive infrared (PIR) technology for improved detection coverage for low bay and high bay applications

Sharkward Bluetooth®

Technology Partner CASAMBI

OVERVIEW

- PIR sensor.
- Bluetooth®SIG mesh.
- High-End Trim, Zoning, Continuous Bi-level Dimming.
- LED Motion indicator.
- Mounting height up to 50 ft .
- 360° coverage pattern.
- Line Voltage connector.

TECHNICAL DATA

Motion Sensing	Passive IR
Input Power	120/277VAC 50/60Hz
Control Output	0-10V,max 25mA sinking current
Maximum load	Resistive/Halogen - 800W@120V/1200W@277V Fluorescent Ballast - 660W@120V/1200W@277V Electronic Ballast (LED/CFL) - 5A@120V/5A@277V
Len L3(High bay)	Max.dectection radius 30ft; Max.mounting height 50ft
Len L4(Low bay)	Max.dectection radius 30ft; Max.mounting height 8ft
Operating temperature	-40°C~+70°C
Wireless Standards	5.0 Bluetooth Mesh
Max Bluetooth Range	200ft(60m)
Warranty	5years

ORDERING INFORMATION

BRI823-B-D-BLE-CB Bluetooth Passive Infrared sensor

DIMENSIONS AND APPEARANCE

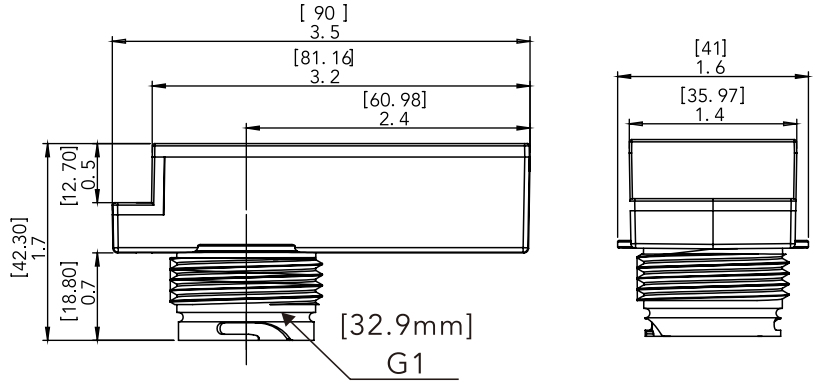

OCCUPANCY DETECTION OVERLAP

L3 Lens

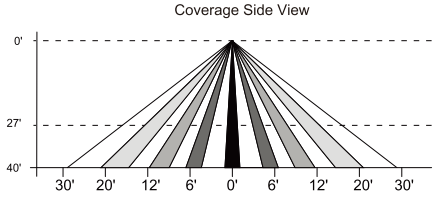

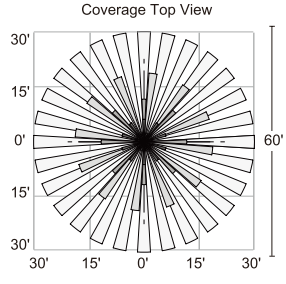

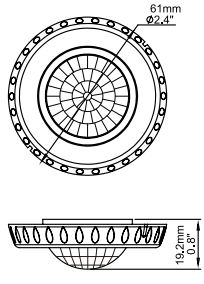

360 ° Coverage

L4 Lens

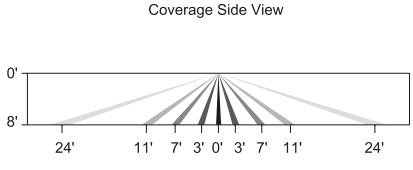

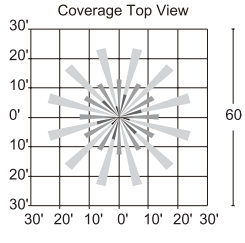

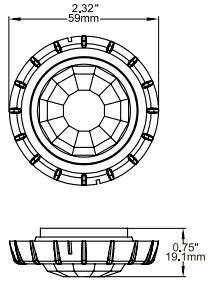

360 ° Coverage

WIRING DIAGRAM

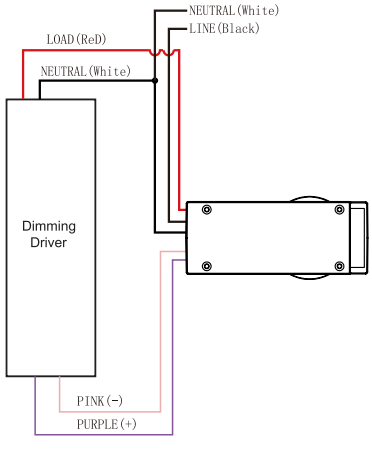

BRI823-X-D-BLE-CB

SPECIFICATION

The BRI823-X-D-BLE-CB uses PIR motion detector architecture and passive infrared (PIR) technology for improved detection coverage for low bay and high bay applications.

Sharkward Bluetooth®

Technology Partner CASAMBI

OVERVIEW

- PIR sensor.
- Bluetooth®SIG mesh.
- High-End Trim, Zoning, Continuous Bi-level Dimming.
- LED Motion indicator.
- Mounting height up to 50 ft .
- 360° coverage pattern.
- Line Voltage connector.

TECHNICAL DATA

Motion Sensing	Passive IR
Input Power	120/277VAC 50/60Hz
Control Output	0-10V,max 25mA sinking current
Maximum load	Resistive/Halogen - 800W@120V/1200W@277V Fluorescent Ballast - 660W@120V/1200W@277V Electronic Ballast (LED/CFL) - 5A@120V/5A@277V
Len L3(High bay)	Max.dectection radius 30ft; Max.mounting height 50ft
Len L4(Low bay)	Max.dectection radius 30ft; Max.mounting height 8ft
Operating temperature	-40°C~+70°C
Wireless Standards	5.0 Bluetooth Mesh
Max Bluetooth Range	200ft(60m)
Warranty	5years

ORDERING INFORMATION

BRI823-X-D-BLE-CB Bluetooth Passive Infrared sensor

DIMENSIONS AND APPEARANCE

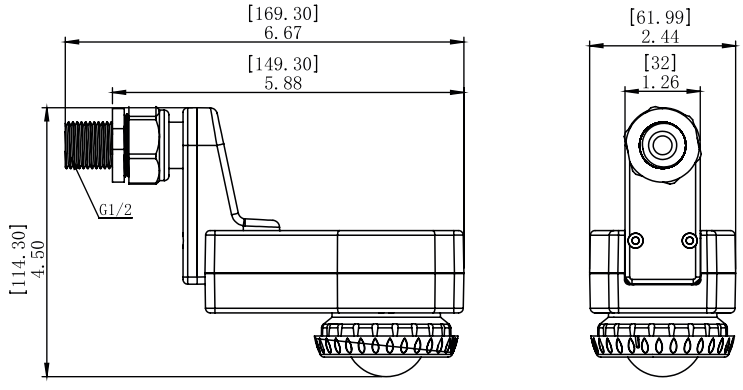

OCCUPANCY DETECTION OVERLAP

L3

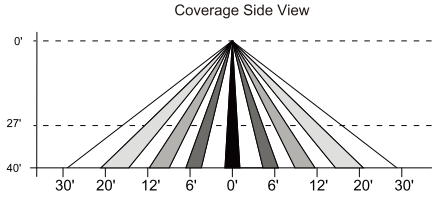

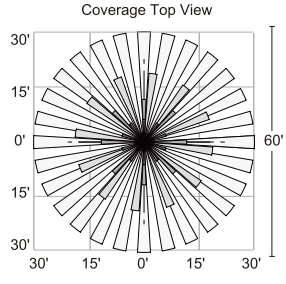

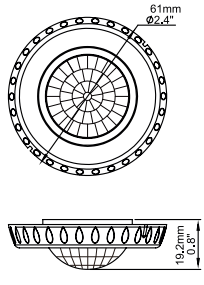

360 ° Coverage

L4

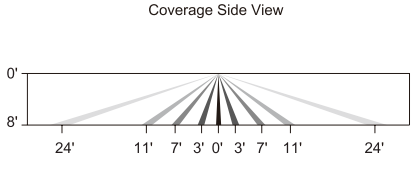

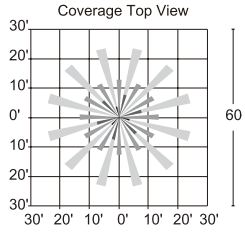

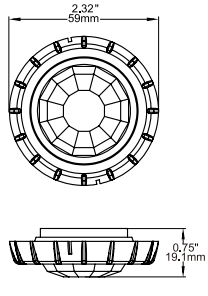

360 ° Coverage

WIRING DIAGRAM

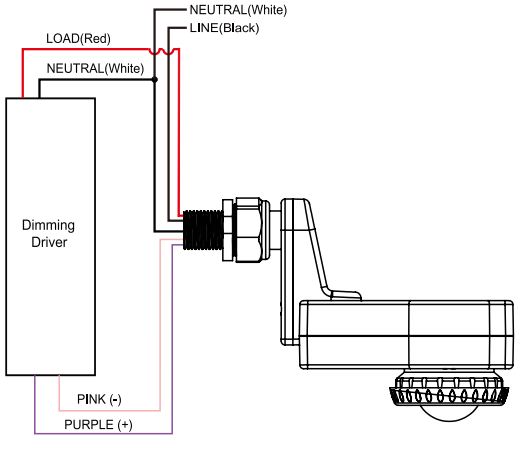

BRI-VOS201-BLE-CB

SPECIFICATION

BRI-VOS201-BLE-SR is a wall mounted PIR sensor.This device communicates wirelessly via Bluetooth Mesh technology allowing for wireless control of luminaires. It can be mouted in any standard single-gang wall box.It utilizes a Bluetooth® Low Energy (BLE) mesh network.

Sharkward Bluetooth®

Technology Partner CASAMBI

OVERVIEW

- PIR sensor.
- Bluetooth® SIG mesh.
- LED Motion indicator.
- Mounting height up to 13 ft .
- 180° coverage pattern.

TECHNICAL DATA

Motion Sensor	Passive infrared sensor
Input Power	120~277VAC 50/60Hz
Max Output:	Standard ballast - 300W@120V 600W@277V Electronic Ballast/LED - 300W@120V 600W@277V Tungsten/Incandescent - 600W@120V 1200W@277V Motor - 1/2hp@120V
Detection angle	180°
Operating temperature	32 to 104 °F (0 to 40 °C)
Max Bluetooth Range	100ft(30m)
Warranty	5years

ORDERING INFORMATION

BRI-VOS201-BLE-CB	Passive Infrared Occupancy/ Vacancy Sensor Wall Switch With Bluetooth

DIMENSIONS AND APPEARANCE

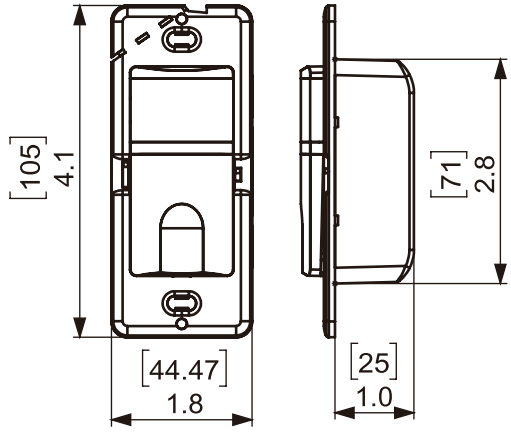

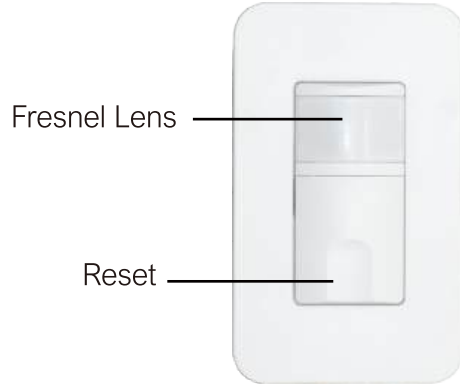

Unit:mm/in

OCCUPANCY DETECTION OVERLAP

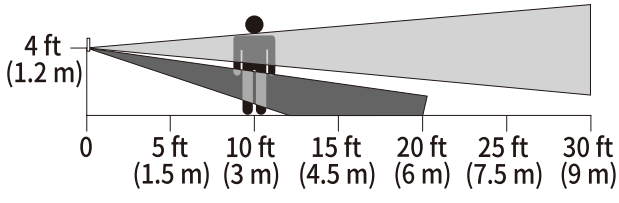

Vertical Beam Diagram

Examples

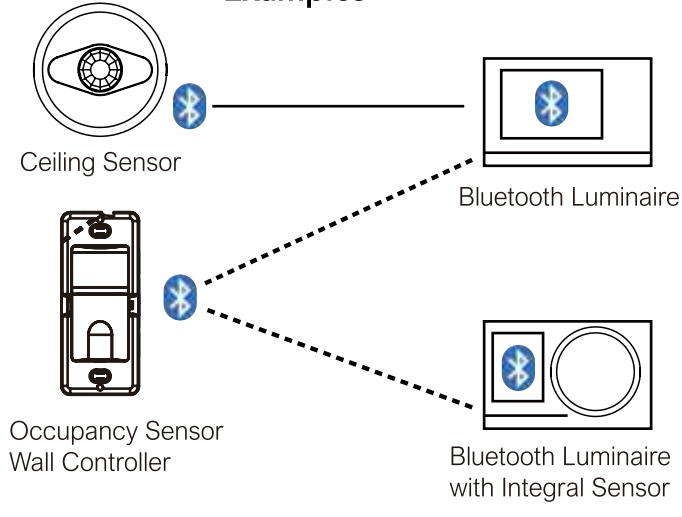

WIRING DIAGRAM

Without Neutral

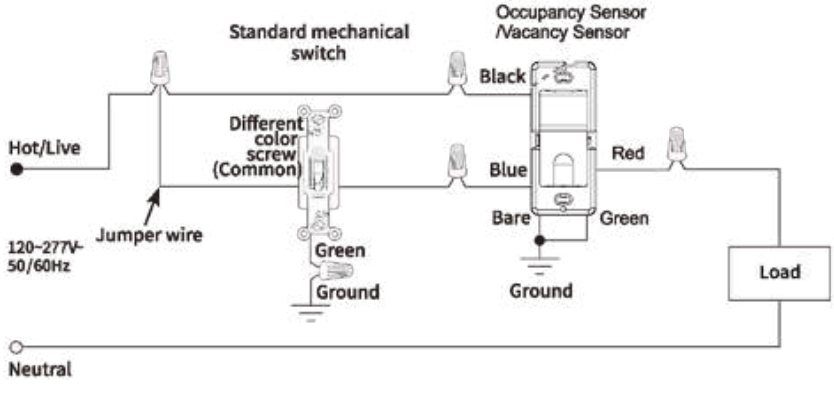

SK701P-BLE-CB

SPECIFICATION

The SK701P-BLE-CB mounts in an outdoorlighting fixture and provides multi-level control based on motion and/or daylight contribution.It controls 0-10 VDC LED drivers ordimming ballasts and is rated for wet and cold locations.All control parameters are adjustable via a wireless configuration tool capable of storing.

Sharkward Bluetooth®

Technology Partner CASAMBI

OVERVIEW

- PIR sensor.
- Bluetooth®SIG mesh.
- High-End Trim, Zoning, Continuous Bi-level Dimming.
- LED Motion indicator.
- Mounting height up to 7m .
- 360° coverage pattern.
- Line Voltage connector.

TECHNICAL DATA

Dimensions	See diagrams opposite.
Input Power	220/277VAC 50/60Hz
Power consumption	On 799mW, Off 807mW
Cable specification	1m 1/1.13 solid core cable 105°C
Temperature	-10°C to 35°C
Humidity	5 to 95% non-condensing
Material	Flame retardant ABS/PC
Type	Class 2
IP rating	IP65
Maximum Switching Load	2 Amps fluorescent and incandescent lighting. 2 Amps compact fluorescent lighting. 2 Amps low energy lighting. 2 Amps low voltage lighting (switch primary of transformer). Switch SON lighting loads via a contactor.

ORDERING INFORMATION

SK701P-BLE-CB Batten style PIR bluetooth sensor

DIMENSIONS AND APPEARANCE

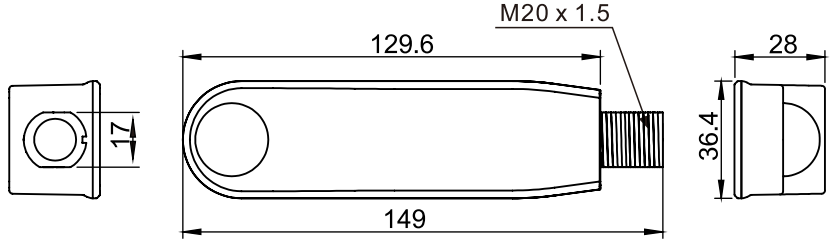

Unit:mm

OCCUPANCY DETECTION OVERLAP

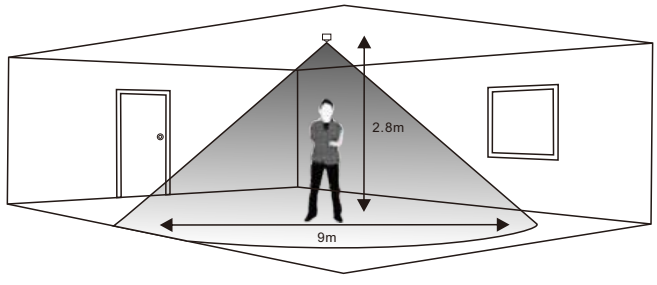

Note: illustration shows an average of the walk across and walk towards figures below.

Area of high sensitivity — Area of lower sensitivity

Walk across

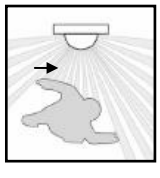

Height	Range Diameter
7m	16m
2.8m	9m

Walk towards

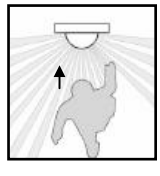

Height	Range Diameter
7m	10m
2.8m	5m

INSTALLATION

Do not grip unit at the lens end. Hold the square body near the threaded end when installing and tightening the nut. Care must be taken to prevent damage to the lens and surrounding IP seal.

WIRING DIAGRAM

Non-Dimming Driver

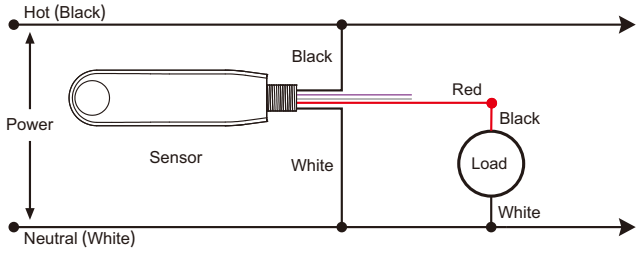

Dimming Driver

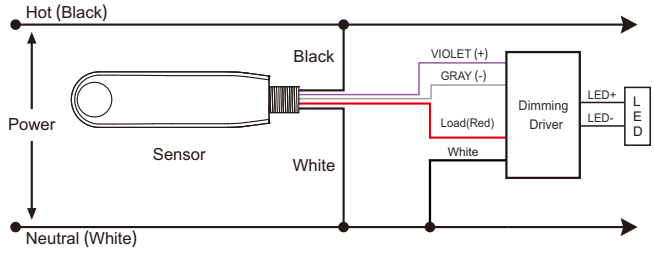

ANT-3D-BLE-CB

SPECIFICATION

The ANT-3D-BLE-CB uses bluetooth microwave motion detector architecture technology for improved detection coverage for low bay applications.

Sharkward Bluetooth®

Technology Partner CASAMBI

OVERVIEW

- Microwave sensor.
- Bluetooth® SIG mesh.
- High-End Trim, Zoning, Continuous Bi-level Dimming.
- LED Motion indicator.
- Mounting height up to Max 13ft(4m).
- 360° coverage pattern.
- Low Voltage connector.

TECHNICAL DATA

Motion Sensor	Microwave sensor
Input Power	10-14VDC,>50mA
Control Output	0-10V,max 25mA sinking current
HF System	5.8GHz±75MHz
Transmission power	<0.2mW
Mounting height	13ft(4m) Max.
Detection angle	360°
Operating temperature	-40℃~70℃
IP rating	20
Max Bluetooth Range	100ft(30m)
Warranty	5years

ORDERING INFORMATION

ANT-3D-BLE-CB Bluetooth Microwave Sensor with Clips

DIMENSIONS AND APPEARANCE

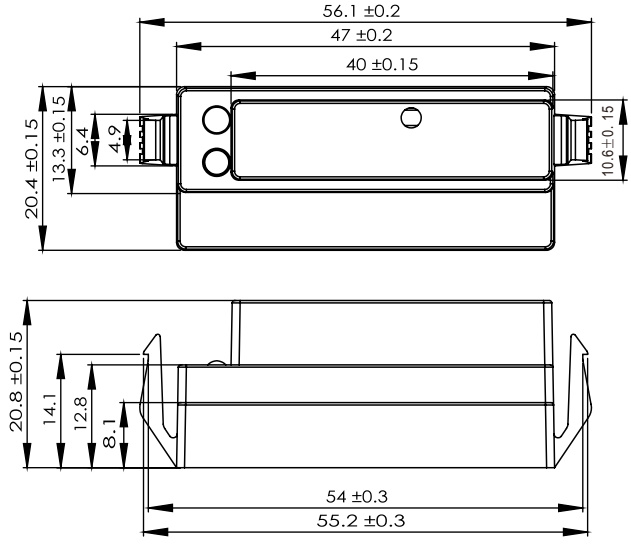

Unit:mm/in

OCCUPANCY DETECTION OVERLAP

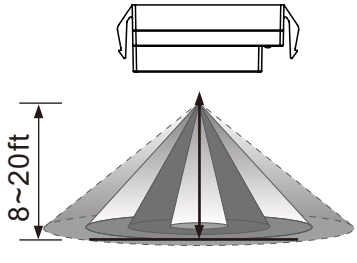

Height of installation8~20ft

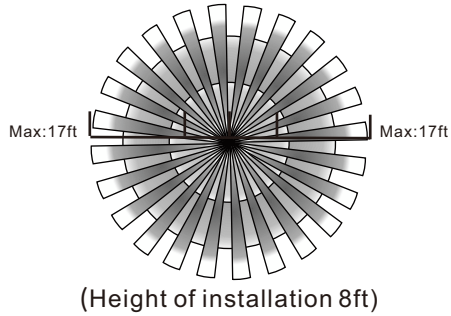

(Height of installation 8ft)
Detection range

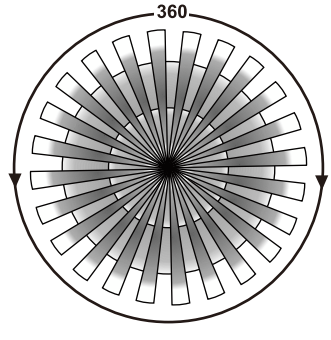

Detection angel

WIRING DIAGRAM

Wiring with dimming ballast or LED driver.

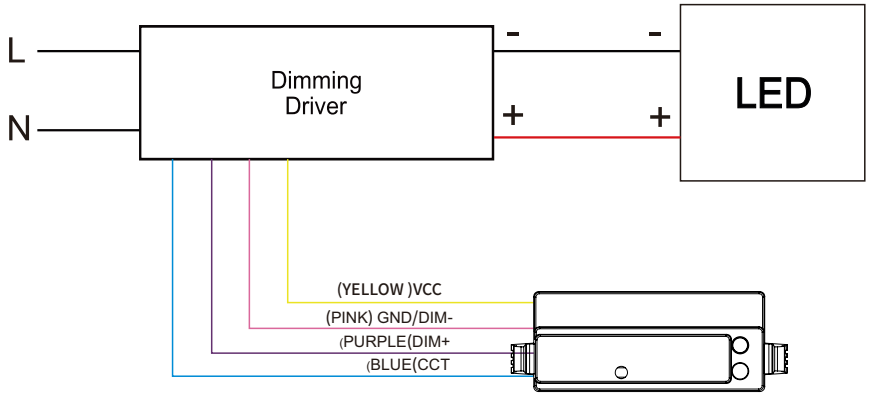

ANT-7-BLE-CB

SPECIFICATION

The ANT-7-BLE-CB uses microwave motion detector architecture technology for improved detection coverage for low bay applications.

Sharkward Bluetooth®

Technology Partner CASAMBI

OVERVIEW

- Microwave sensor.
- Bluetooth®SIG mesh.
- High-End Trim, Zoning, Continuous Bi-level Dimming.
- LED Motion indicator.
- Mounting height up to 13 ft .
- 360° coverage pattern.
- Low Voltage connector..

TECHNICAL DATA

Motion Sensor	Microwave sensor
Input Power	10-14VDC,>50mA
Control Output	0-10V,max 25mA sinking current
HF System	5.8GHz±75MHz
Transmission power	<0.2mW
Mounting height	13ft(4m) Max.
Detection angle	360°
Operating temperature	-40℃~70℃
IP rating	20
Max Bluetooth Range	100ft(30m)
Warranty	5years

ORDERING INFORMATION

ANT-7-BLE-CB Bluetooth Microwave Fixture Sensor

DIMENSIONS AND APPEARANCE

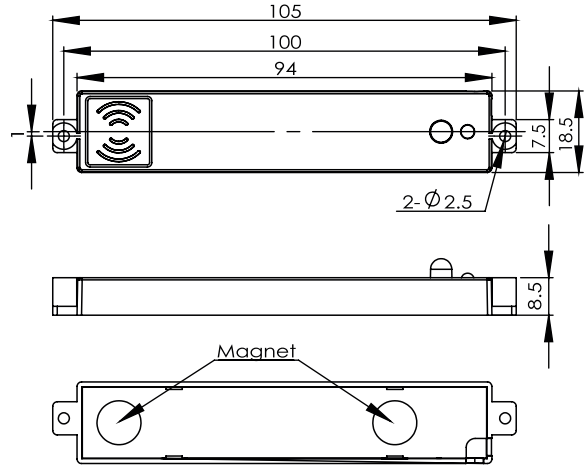

Unit:mm/in

OCCUPANCY DETECTION OVERLAP

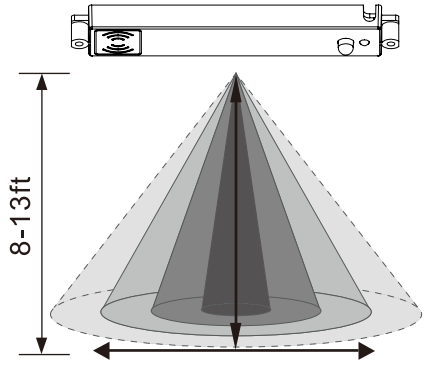

Height of installation 8-13ft

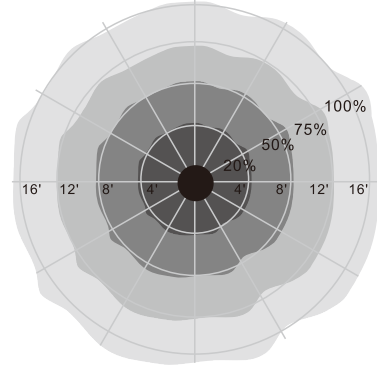

WIRING DIAGRAM

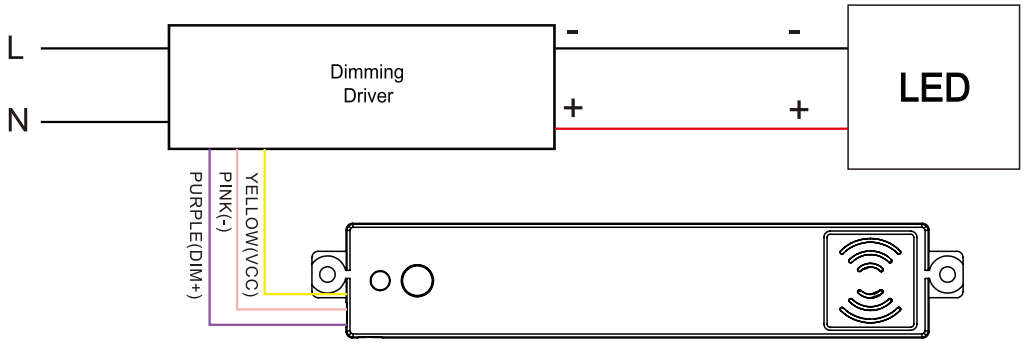

ANT-7D-BLE-CB

SPECIFICATION

The ANT-7D-BLE-CB uses microwave motion detector architecture technology for improved detection coverage for low bay applications.

Sharkward Bluetooth®

Technology Partner CASAMBI

OVERVIEW

- Microwave sensor.
- Bluetooth® SIG mesh.
- High-End Trim, Zoning, Continuous Bi-level Dimming.
- LED Motion indicator.
- Mounting height up to 12 ft .
- 360° coverage pattern.
- Low Voltage connector.

TECHNICAL DATA

Motion Sensor	Microwave sensor
Input Power	10-14VDC,>50mA
Control Output	0-10V,max 25mA sinking current
HF System	5.8GHz±75MHz
Transmission power	<0.2mW
Mounting height	12ft(4m) Max.
Detection angle	360°
Operating temperature	-40℃~70℃
IP rating	20
Max Bluetooth Range	100ft(30m)
Warranty	5years

ORDERING INFORMATION

ANT-7D-BLE-CB Bluetooth Microwave Fixture Sensor

DIMENSIONS AND APPEARANCE

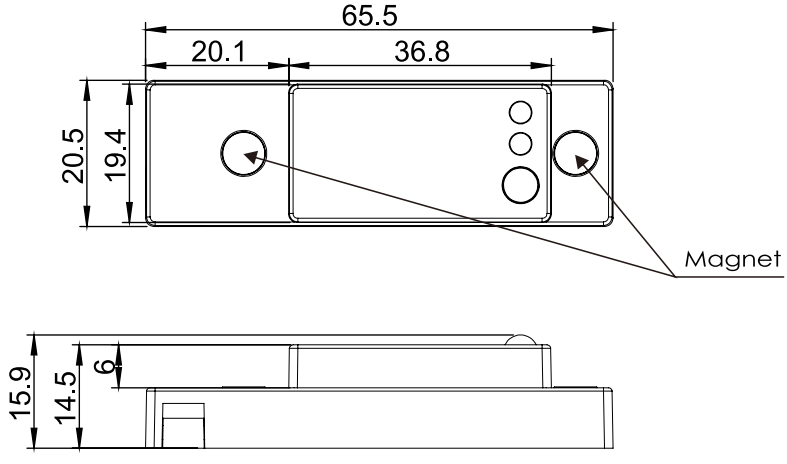

Unit:mm/in

OCCUPANCY DETECTION OVERLAP

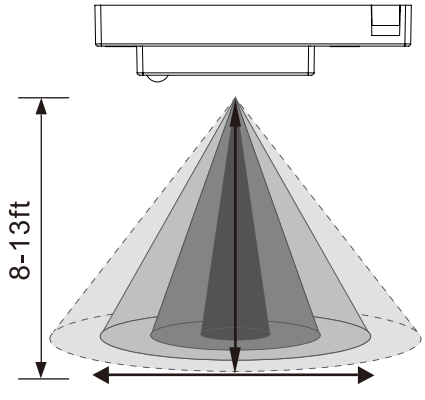

Height of installation 8-13ft

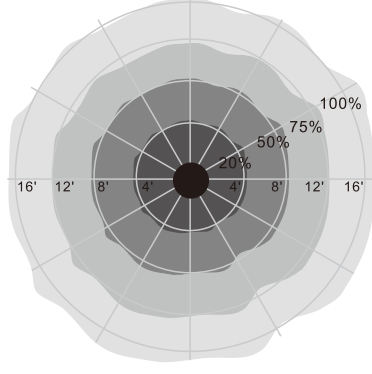

WIRING DIAGRAM

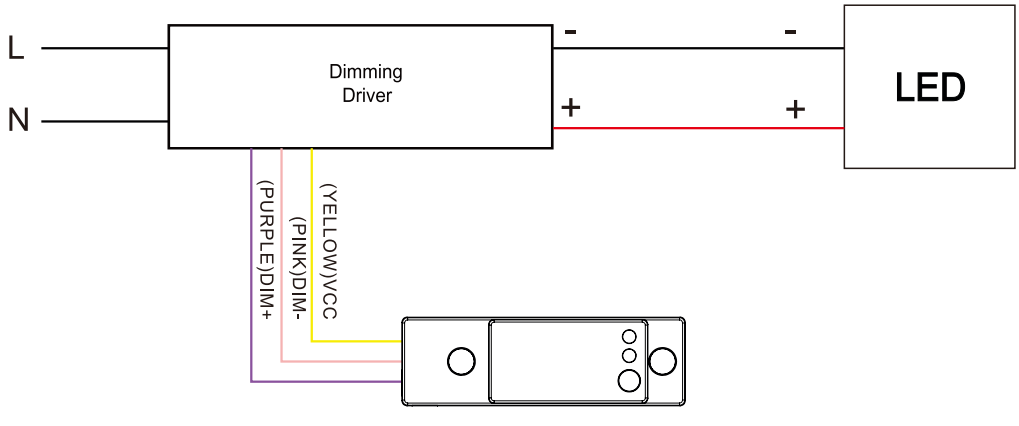

ANT-5-4T-BLE-CB

SPECIFICATION

The ANT-5-4T-BLE-CB uses microwave motion detector architecture technology for improved detection coverage for high bay applications.

Sharkward Bluetooth®

Technology Partner CASAMBI

OVERVIEW

- Microwave sensor.
- Bluetooth® SIG mesh.
- High-End Trim, Zoning, Continuous Bi-level Dimming.
- LED Motion indicator.
- Mounting height up to 40 ft .
- 360° coverage pattern.
- Low Voltage connector.

TECHNICAL DATA

Motion Sensor	Microwave sensor
Input Power	12-24VDC,>50mA
Control Output	0-10V,max 25mA sinking current
HF System	5.8GHz±75MHz
Transmission power	<0.2mW
Mounting height	40ft(12m) Max.
Detection angle	360°
Operating temperature	-40°F ~ +158°F (-40°C ~ +70°C)
IP rating	65
Max Bluetooth Range	200ft
Warranty	5years

ORDERING INFORMATION

ANT-5-4T-BLE-CB Bluetooth Microwave Fixture Sensor

DIMENSIONS AND APPEARANCE

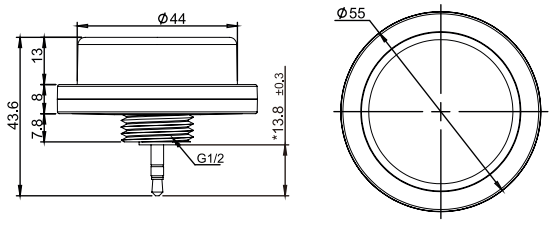

ANT-5-4T-BLE-GE(sensor)

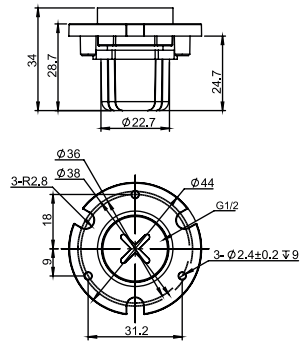

ANT-5-4B-2(receptacle)

Unit:mm/in

OCCUPANCY DETECTION OVERLAP

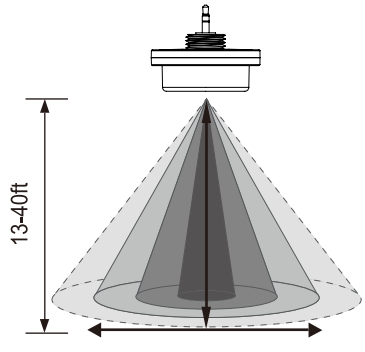

Height of installation13-40ft

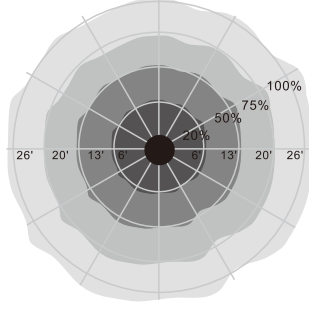

WIRING DIAGRAM

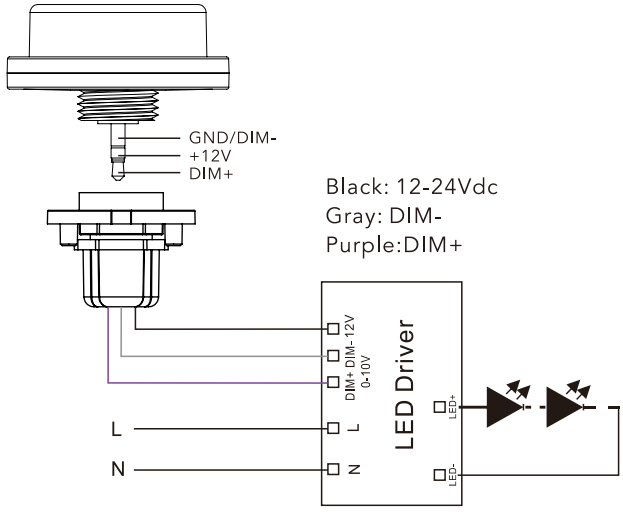

ANT-5-ZT-BLE-CB

SPECIFICATION

The ANT-5-ZT-BLE-CB uses microwave motion detector architecture technology for improved detection coverage for high bay applications.

Sharkward Bluetooth®

Technology Partner CASAMBI

OVERVIEW

- Microwave sensor.
- High-End Trim, Zoning, Continuous Bi-level Dimming.
- Mounting height up to 40 ft .
- 360° coverage pattern.
- Low Voltage connector.

TECHNICAL DATA

Motion Sensor	Microwave sensor
Input Power	12-24VDC,>50mA
Control Output	0-10V,max 25mA sinking current
HF System	5.8GHz±75MHz
Transmission power	<0.2mW
Mounting height	40ft(12m) Max.
Detection angle	360°
Operating temperature	-40℃~70℃
IP rating	65
Max Bluetooth Range	200ft(60m)
Connection method	Zhaga Book 18
Warranty	5years

ORDERING INFORMATION

ANT-5-ZT-BLE-CB Casambi Bluetooth Microwave Fixture Sensor

DIMENSIONS AND APPEARANCE

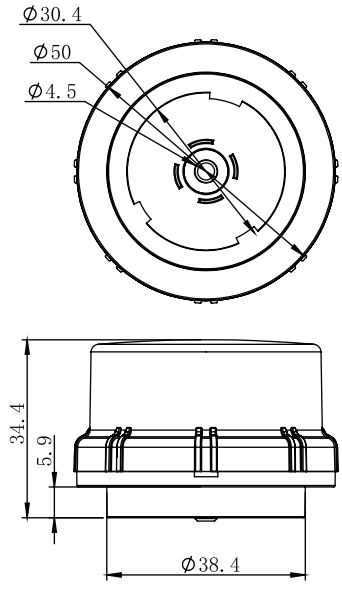

Unit:mm/in

OCCUPANCY DETECTION OVERLAP

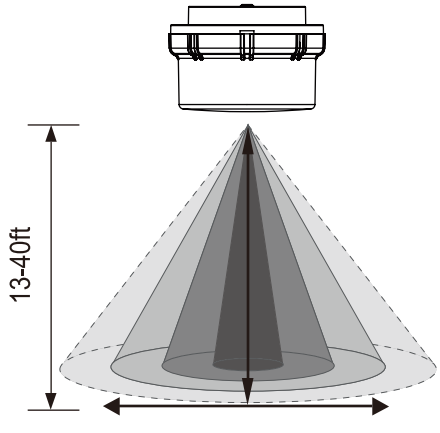

Height of installation13-40ft

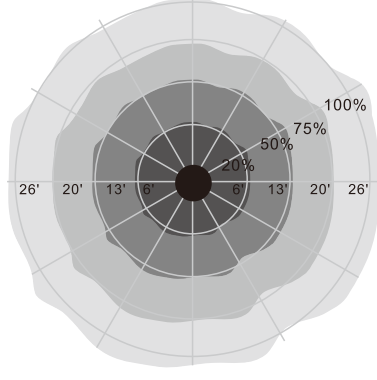

WIRING DIAGRAM

— Port 1 : 12-24Vdc
— Port 2 : GND/DIM -
— Port 3 : DIM +
— Port 4 : NC

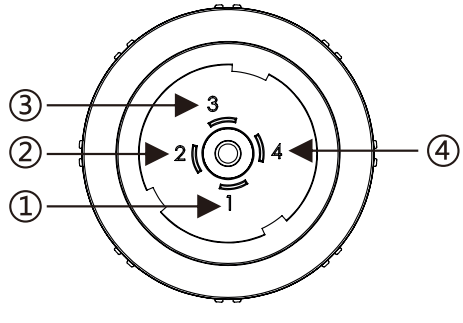

ANT-5-Z10-BLE-CB

SPECIFICATION

The ANT-5-Z10-BLE-CB uses microwave motion detector architecture technology for improved detection coverage for high bay applications.

Sharkward Bluetooth®

Technology Partner CASAMBI

OVERVIEW

- Microwave sensor.
- Bluetooth® SIG mesh.
- High-End Trim, Zoning, Continuous Bi-level Dimming.
- LED Motion indicator.
- Mounting height up to 40 ft .
- 360° coverage pattern.
- Low Voltage connector.

TECHNICAL DATA

Motion Sensor	Microwave sensor
Input Power	12-24VDC,>50mA
Control Output	0-10V,max 25mA sinking current
HF System	5.8GHz±75MHz
Transmission power	<0.2mW
Mounting height	40ft(12m) Max.
Detection angle	360°
Operating temperature	-20°C~60°C
IP rating	65
Max Bluetooth Range	200ft
Connection method	Z10
Warranty	5years

ORDERING INFORMATION

ANT-5-Z10-BLE-CB Z10 Bluetooth Microwave Fixture Sensor

DIMENSIONS AND APPEARANCE

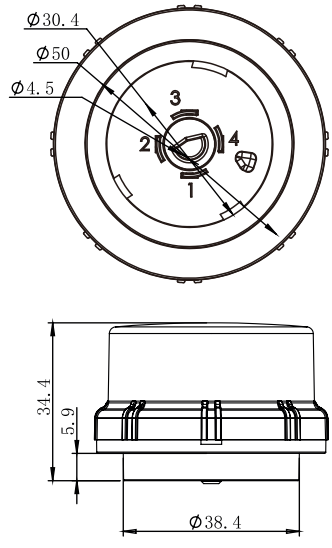

Unit:mm/in

OCCUPANCY DETECTION OVERLAP

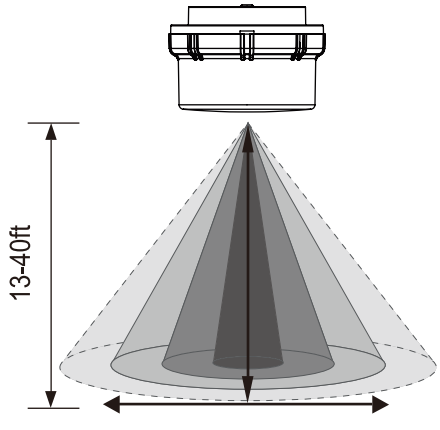

Height of installation13-40ft

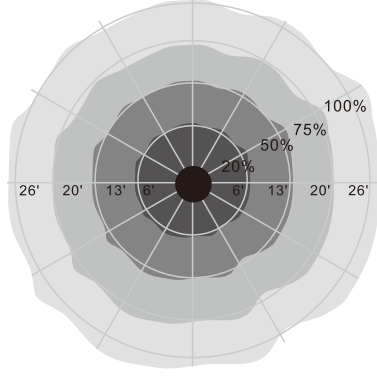

WIRING DIAGRAM

- Port 1 : 12-24Vdc
- Port 2 : GND/DIM -
- Port 3 : DIM +
- Port 4 : NC

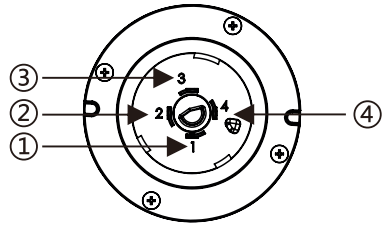

ANT-5-4R-BLE-CB

SPECIFICATION

The ANT-5-4R-BLE-CB uses microwave motion detector architecture technology for improved detection coverage for high bay applications.

Sharkward Bluetooth®

Technology Partner CASAMBI

OVERVIEW

- Microwave sensor.
- Bluetooth® SIG mesh.
- High-End Trim, Zoning, Continuous Bi-level Dimming.
- LED Motion indicator.
- Mounting height up to 40 ft .
- 360° coverage pattern.
- Low Voltage connector.

TECHNICAL DATA

Motion Sensor	Microwave sensor
Input Power	12-24VDC,>50mA
Control Output	0-10V,max 25mA sinking current
HF System	5.8GHz±75MHz
Transmission power	<0.2mW
Mounting height	40ft(12m) Max.
Detection angle	360°
Operating temperature	-40°F ~+158°F (-40°C ~+70°C)
IP rating	65
Max Bluetooth Range	200ft
Warranty	5years

ORDERING INFORMATION

ANT-5-4R-BLE-CB 3PIN Bluetooth Microwave Fixture Sensor

DIMENSIONS AND APPEARANCE

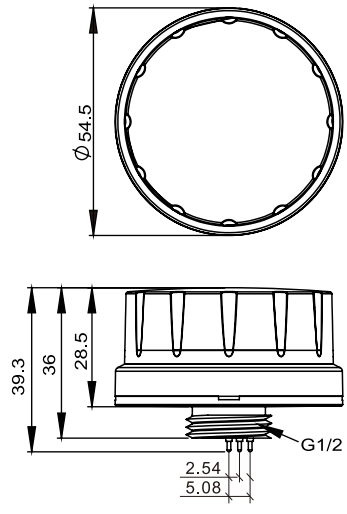

ANT-5-4R-BLE-GE(sensor)

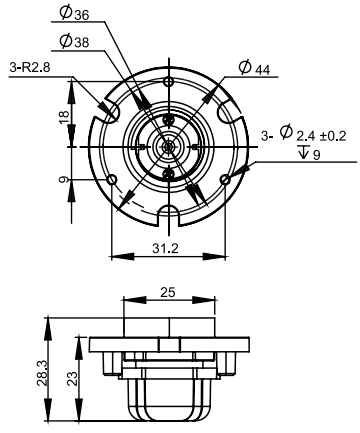

ANT-5-4S(receptacle)

Unit:mm/in

OCCUPANCY DETECTION OVERLAP

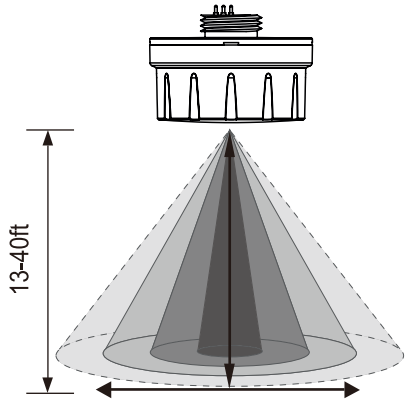

Height of installation13-40ft

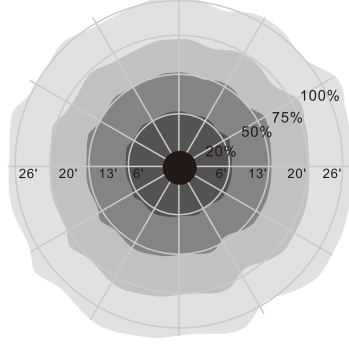

WIRING DIAGRAM

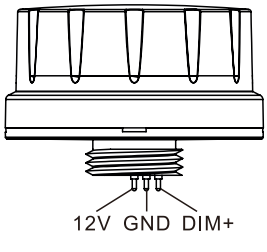

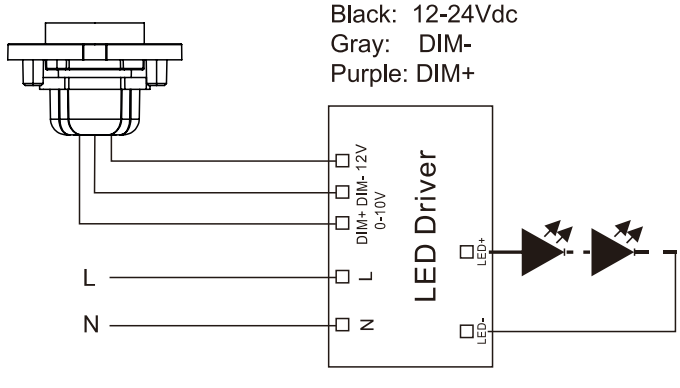

ANT-5-4H-BLE-CB

SPECIFICATION

The ANT-5-4H-BLE-CB uses microwave motion detector architecture technology for improved detection coverage for high bay applications.

Sharkward Bluetooth®

Technology Partner CASAMBI

OVERVIEW

- Microwave sensor.
- Bluetooth® SIG mesh.
- High-End Trim, Zoning, Continuous Bi-level Dimming.
- LED Motion indicator.
- Mounting height up to 40 ft .
- 360° coverage pattern.
- Low Voltage connector.

TECHNICAL DATA

Motion Sensor	Microwave sensor
Input Power	12-24VDC,>50mA
Control Output	0-10V,max 25mA sinking current
HF System	5.8GHz±75MHz
Transmission power	<0.2mW
Mounting height	40ft(12m) Max.
Detection angle	360°
Operating temperature	-20°C~60°C
IP rating	65
Max Bluetooth Range	300ft(100m)
Warranty	5years

ORDERING INFORMATION

ANT-5-4H-BLE-CB 3PIN Bluetooth Microwave Fixture Sensor

DIMENSIONS AND APPEARANCE

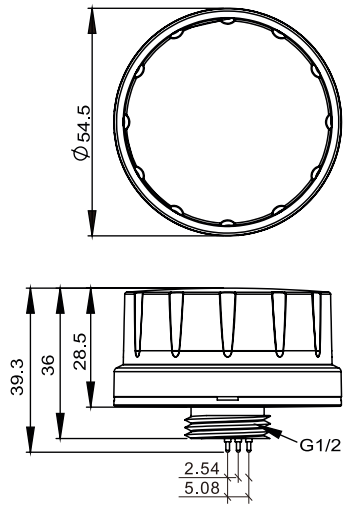

ANT-5-4R-BLE-GE(sensor)

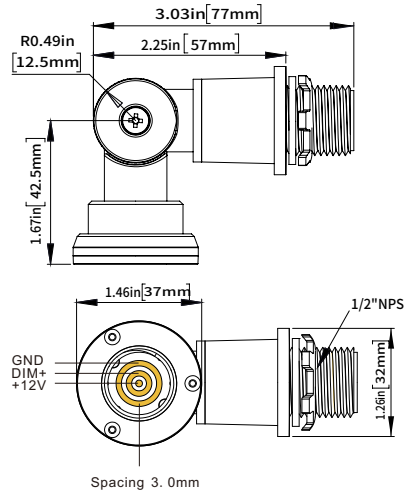

ANT-5-16S3(receptacle)

Unit:mm/in

OCCUPANCY DETECTION OVERLAP

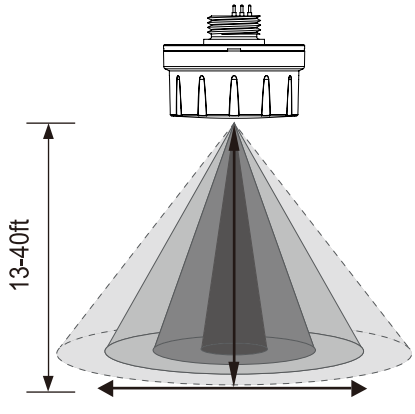

Height of installation13-40ft

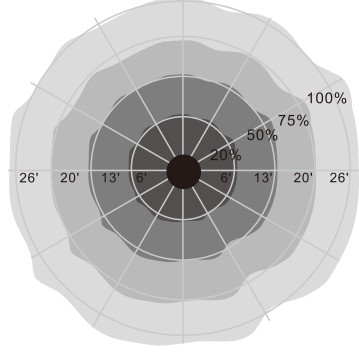

WIRING DIAGRAM

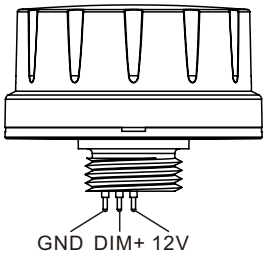

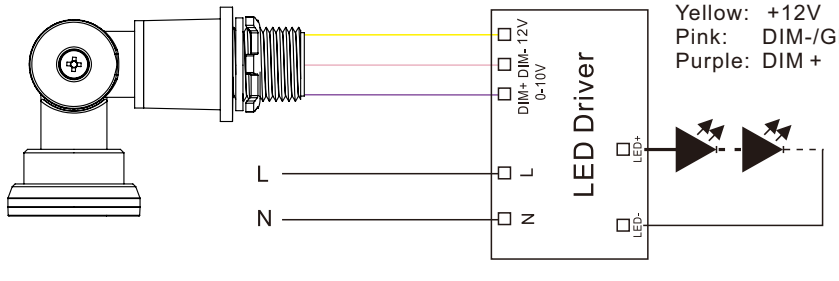

ANT-5-Z10-CON-BLE-CB

SPECIFICATION

ANT-5-Z10-CON-BLE-CB allows for 0-10v dimming, and is made to t into a bluetooth mesh system.It utilizes a Bluetooth® low energy (BLE) mesh network.

Sharkward Bluetooth®

Technology Partner CASAMBI

OVERVIEW

- Bluetooth®SIG mesh.
- High-End Trim, Zoning, Continuous Bi-level Dimming.
- LED Motion indicator.
- This device can be powered by 12V auxiliary power from dim-to-off LED driver for ease of setup and operation.
- It is suitable for a variety of indoor and outdoor applications. It comes with Low voltage Connector, and is IP 65 rated.

TECHNICAL DATA

Input Power	12-24VDC,>50mA
Control Output	0-10V,max 25mA sinking current
Operating temperature	-40°F~+158°F(-40°C+70°C)
IP rating	65
Wireless Standards	5.0 Bluetooth Mesh
Max Bluetooth Range	200ft(60m)
Warranty	5years

ORDERING INFORMATION

ANT-5-Z10-CON-BLE-CB	0-10V Wireless Fixture Controller

DIMENSIONS AND APPEARANCE

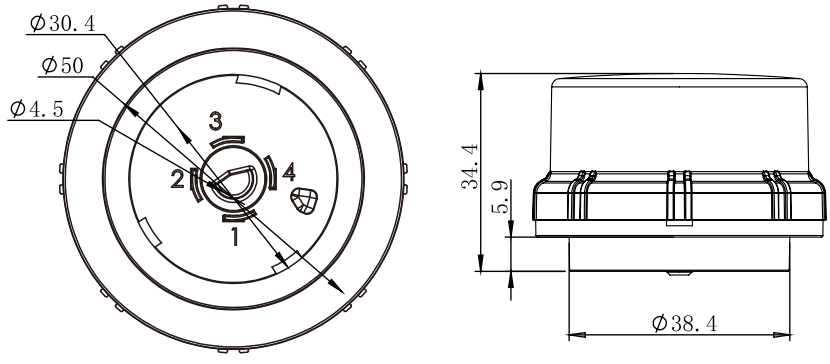

Unit:mm/in

WIRING DIAGRAM

— Port 1 : 12-24Vdc
— Port 2 : GND/DIM -
— Port 3 : DIM +
— Port 4 : NC

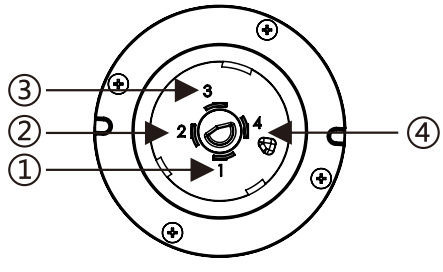

ANT-5-ZT-CON-BLE-CB

SPECIFICATION

ANT-5-ZT-CON-BLE-CB allows for 0-10v dimming, and is made to t into a bluetooth mesh system.It utilizes a Bluetooth® low energy (BLE) mesh network.

Sharkward Bluetooth®

Technology Partner CASAMBI

OVERVIEW

- Bluetooth®SIG mesh.
- High-End Trim, Zoning, Continuous Bi-level Dimming.
- LED Motion indicator.
- This device can be powered by 12V auxiliary power from dim-to-off LED driver for ease of setup and operation.
- It is suitable for a variety of indoor and outdoor applications. It comes with Low voltage Connector, and is IP 65 rated.

TECHNICAL DATA

Input Power	12-24VDC,>50mA
Control Output	0-10V,max 25mA sinking current
Operating temperature	-40°F~+158°F(-40°C+70°C)
IP rating	65
Wireless Standards	5.0 Bluetooth Mesh
Max Bluetooth Range	200ft(60m)
Warranty	5years

ORDERING INFORMATION

ANT-5-ZT-CON-BLE-CB 0-10V Wireless Fixture Controller

DIMENSIONS AND APPEARANCE

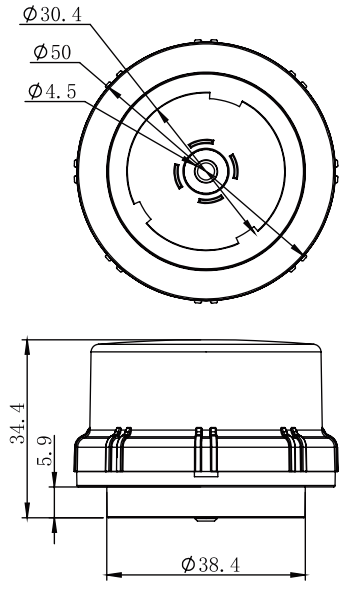

Unit:mm/in

OCCUPANCY DETECTION OVERLAP

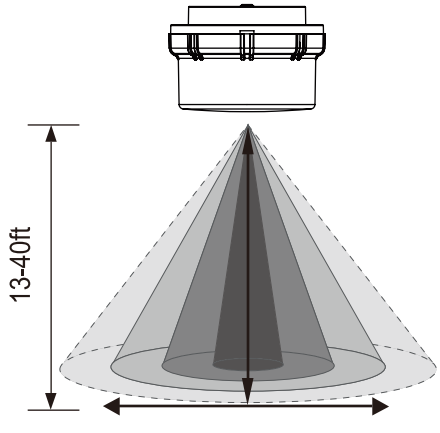

Height of installation13-40ft

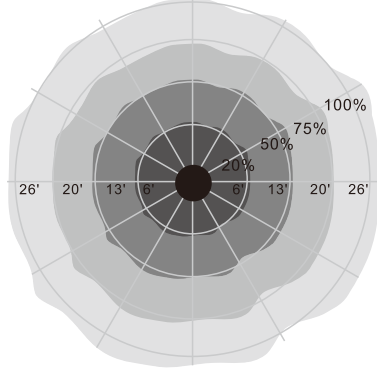

WIRING DIAGRAM

- Port 1 : 12-24Vdc
- Port 2 : GND/DIM -
- Port 3 : DIM +
- Port 4 : NC

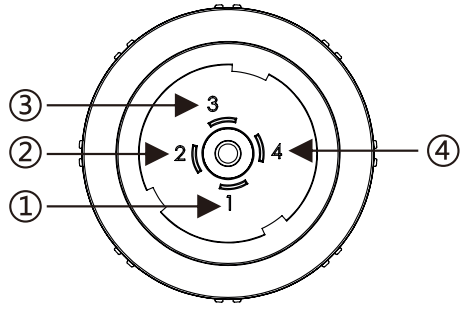

ANT-11-CON-BLE-CB

SPECIFICATION

ANT-11-CON-BLE-CB allows for 0-10v dimming, and is made to into a bluetooth mesh system.

Sharkward Bluetooth®

Technology Partner CASAMBI

OVERVIEW

- Bluetooth® SIG mesh.
- High-End Trim, Zoning, Continuous Bi-level Dimming.
- LED Motion indicator.
- This device can be powered by 12V auxiliary power from dim-to-off LED driver for ease of setup and operation.
- It is suitable for a variety of indoor and outdoor applications. It comes with Low voltage Connector, and is IP 65 rated.

TECHNICAL DATA

Input Power	12-24VDC,>50mA
Control Output	0-10V,max 25mA sinking current
Operating temperature	-40°F~+158°F(-40°C+70°C)
IP rating	65
Wireless Standards	5.0 Bluetooth Mesh
Max Bluetooth Range	200ft(60m)
Warranty	5years

ORDERING INFORMATION

ANT-11-CON-BLE-CB 0-10V Wireless Fixture Controller

DIMENSIONS AND APPEARANCE

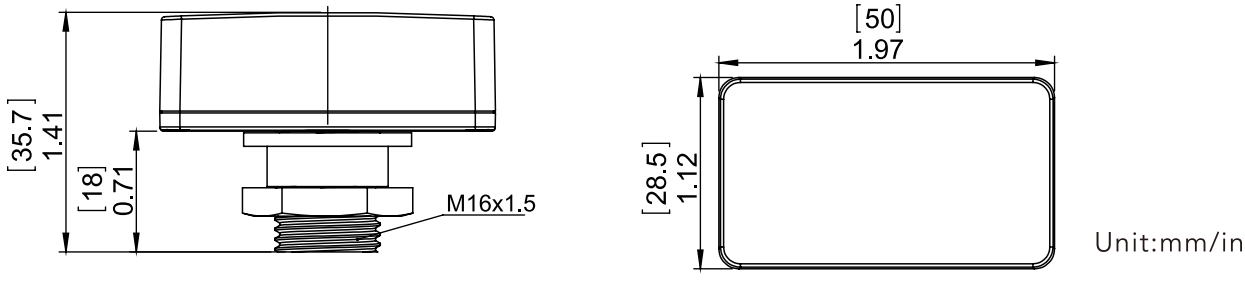

WIRING DIAGRAM

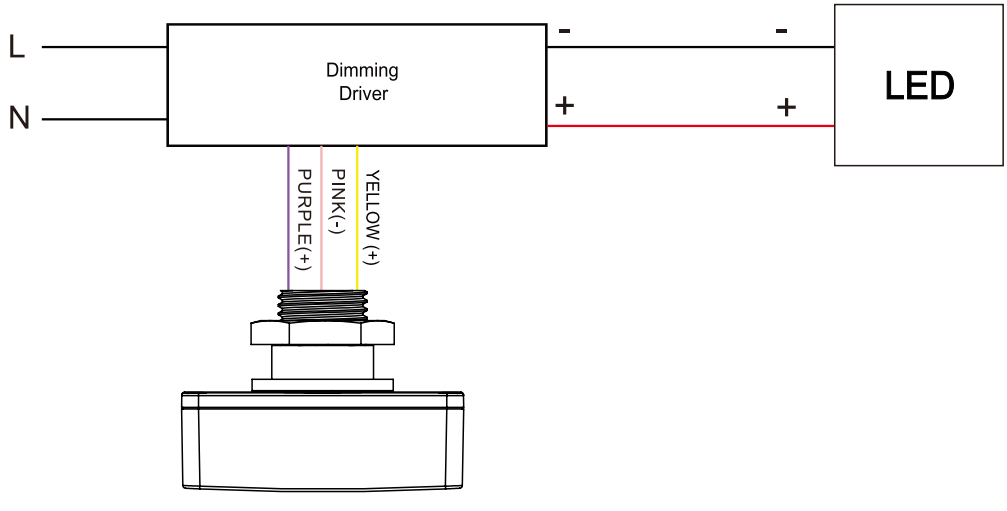

SK104-CON-BLE-CB

SPECIFICATION

SK-104-BLE-CON-CB allows for 0-10v dimming, and is made to into a bluetooth mesh system.

Sharkward Bluetooth®

Technology Partner CASAMBI

OVERVIEW

- Bluetooth® SIG mesh.
- High-End Trim, Zoning, Continuous Bi-level Dimming.
- LED Motion indicator.
- This device can be powered by 12V auxiliary power from dim-to-off LED driver for ease of setup and operation.
- It is suitable for a variety of indoor and outdoor applications.

It comes with Low voltage Connector, and is IP65 rated.

TECHNICAL DATA

Input Power	10-14VDC,>50mA
Control Output	0-10V,max 25mA sinking current
Operating temperature	-40°F~+158°F(-40°C+70°C)
IP rating	65
Wireless Standards	5.0 Bluetooth Mesh
Max Bluetooth Range	100ft(30m)
Warranty	5years

ORDERING INFORMATION

SK104-CON-BLE-CB 0-10V Wireless Fixture Controller

DIMENSIONS AND APPEARANCE

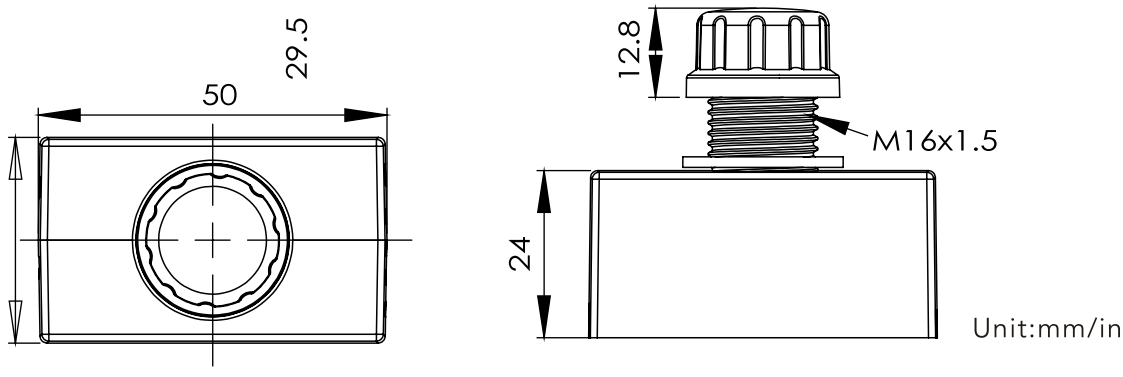

WIRING DIAGRAM

Dimming & CCT

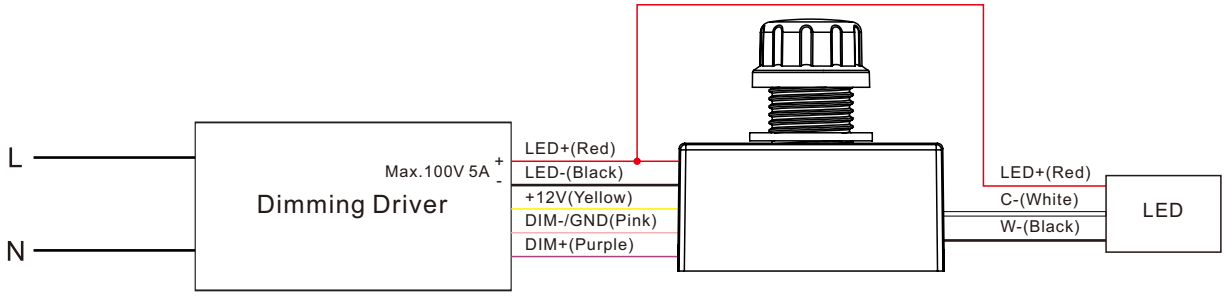

Only Dimming

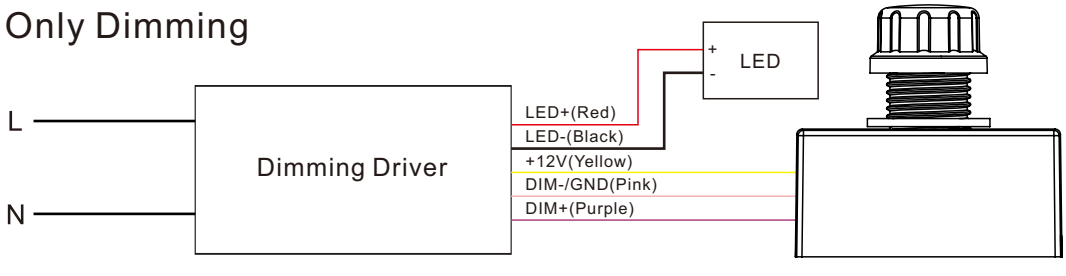

BRI620-CON-BLE-CB

SPECIFICATION

The BRI620-CON-BLE-CB Integrated Fixture Adapter enables Luminaire Level Lighting Control (LLLC) capabilities in a miniature design with integrated "sensor-ready" functionality. It is powered by 12VDC input from dimmable dim-to-off LED drivers and provides connectivity to non-Bluetooth, eco-sensors.

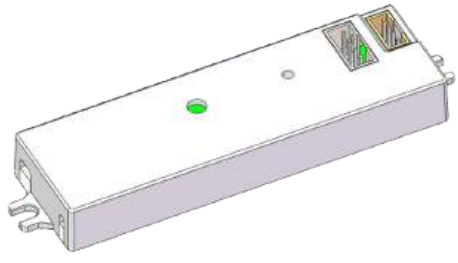

Sharkward Bluetooth®

Technology Partner CASAMBI

OVERVIEW

- Bluetooth® SIG mesh.
- High-End Trim, Zoning, Continuous Bi-level Dimming.
- LED Motion indicator.
- This device can be powered by 12V auxiliary power from dim-to-off LED driver for ease of setup and operation.
- It is suitable for a variety of indoor applications. It comes with Low voltage Connector.

TECHNICAL DATA

Input Power	LED Max. 150VDC Max. 2A
Load Output	Max. 100W
Operating temperature	-40°F~+158°F(-40°C+70°C)
Wireless Standards	5.0 Bluetooth Mesh
Radio Frequency	**2.4GHz ± 75MHz**
Max Bluetooth Range	100ft(30m)
Warranty	5years
IP Rating	**IP20**

ORDERING INFORMATION

BRI620-CON-BLE-CB Dimming & CCT Wireless Fixture Controller

DIMENSIONS AND APPEARANCE

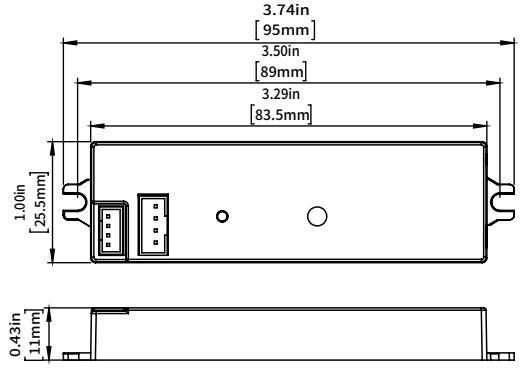

Unit:mm/in

OCCUPANCY DETECTION OVERLAP

BRI620-CON-BLE-GE

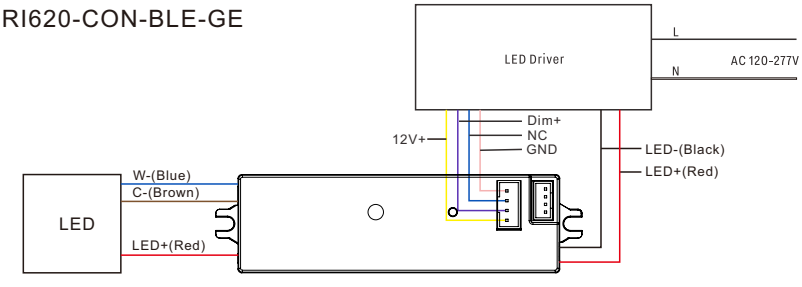

BRI620-BLE-GE-15P

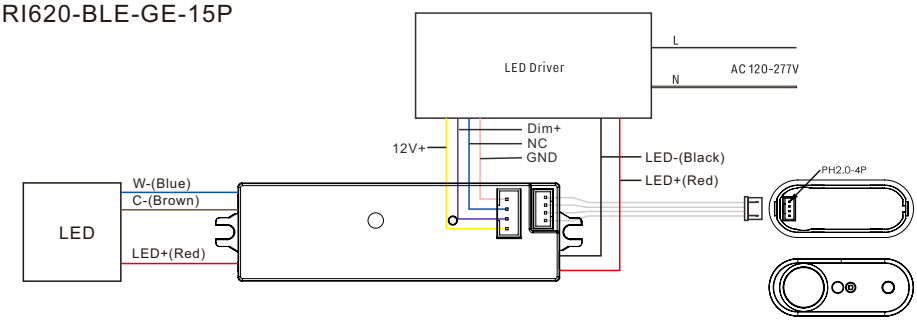

ANT-15P

OPTIONAL SENSOR HEAD

ANT-15P-ES

ANT-7-ES

ANT-4E-ES

BRI-CMP305-LV-BLE-CB

SPECIFICATION

The BRI-CMP305-LV-BLE-CB uses PIR motion detector architecture and passive infrared (PIR) technology for improved detection coverage for high bay and low bay applications.

Sharkward Bluetooth®

Technology Partner CASAMBI

OVERVIEW

- PIR sensor.
- Bluetooth® SIG mesh.
- High-End Trim, Zoning, Continuous Bi-level Dimming.
- LED Motion indicator.
- Mounting height up to 12 ft .
- 360° coverage pattern.
- Low Voltage connector.

TECHNICAL DATA

Motion Sensor	Passive infrared sensor
Input Power	12-24VDC,>50mA
Control Output	0-10V,max 25mA sinking current
Mounting height	12ft(4m) Max.
Detection angle	360°
Operating temperature	-20°C-60°C
Max Bluetooth Range	100ft(30m)
Warranty	5years

ORDERING INFORMATION

BRI-CMP305-LV-BLE-CB Celling Bluetooth Passive Infrared sensor

DIMENSIONS AND APPEARANCE

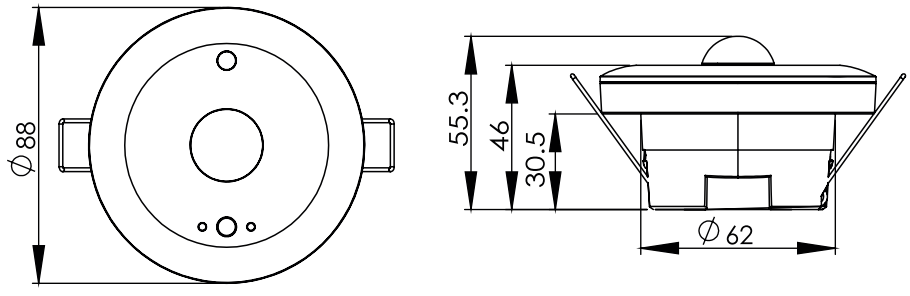

Unit:mm/in

OCCUPANCY DETECTION OVERLAP

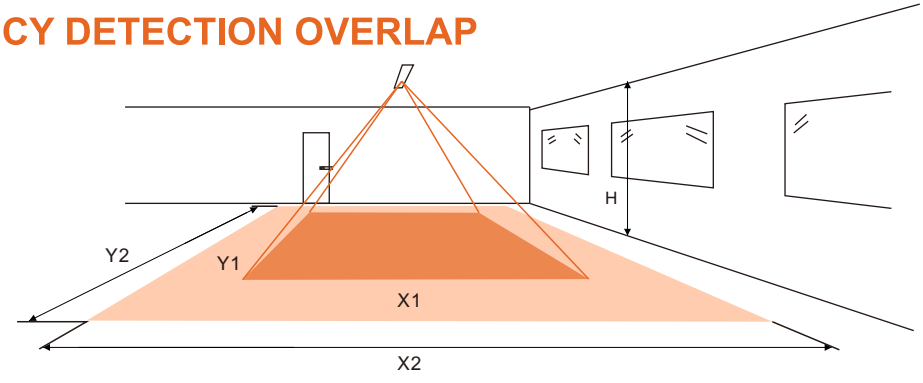

Height	Minor Movement		Major Movement	
H	Y1	X1	Y2	X2
8'/2.4m	10'/2.9m	9'/2.7m	15'/4.5m	10'/2.9m
10'/3m	12'/3.6m	11'/3.4m	18'/5.4m	12'/3.6m

Note: Longer dimension of detection area (Y1, Y2) is parallel to longer dimension.

WIRING DIAGRAM

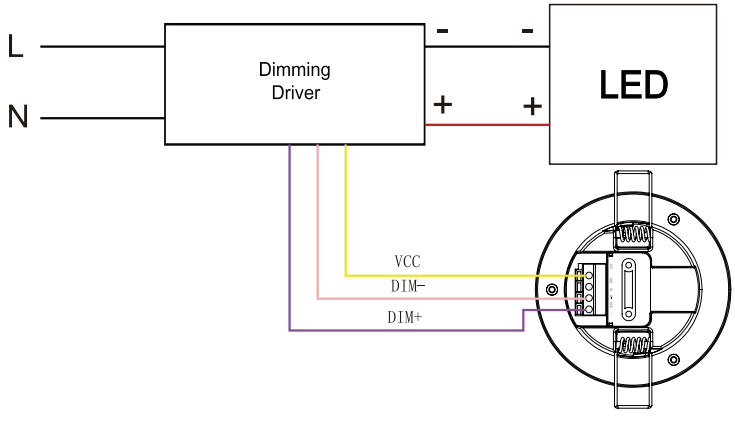

BRI-DT301P-BLE-CB

SPECIFICATION

The low profile BRI-DT301P-BLE-CB sensor use passive infrared (PIR). The sensor mounts on the ceiling with a flat, unobtrusive appear-ance and provides 360 degrees of coverage.

Sharkward Bluetooth®

Technology Partner CASAMBI

OVERVIEW

- PIR &Ultrasonic sensor.
- Bluetooth®SIG mesh.
- LED Motion indicator.
- Mounting height up to 12 ft .
- 360° coverage pattern.

TECHNICAL DATA

- 120/230 (single phase)/277/347 VAC, 50/60 Hz
- @120VAC, 800W Ballast/LED/Tungsten
  @230VAC, 1200W Ballast/LED/Tungsten
  @277VAC, 1200W Ballast/LED/Tungsten
  @347VAC, 1500W Ballast/LED/Tungsten
- Built-in light level sensor – works from 10 to 300 footcandles (107.6 to 3,229.2 lux)
- Operating Temperature: 32°F to +131°F (0°C to +55°C)
- Multi-level, 360° Fresnel lens for superior occupancy detection
- Mounting options: 4 square junction box with double gang mudring; 4 inch octagonal junction box
- Dimensions: 4.50" diameter x 1.44" deep (114.5mm x 36.4mm)
- UL and cUL listed
- Wireless Standards: 5.0 Bluetooth Mesh
- Five year warranty

ORDERING INFORMATION

BRI-DT301P-BLE-CB	Line voltage PIR occupancy sensor with Bluetooth

DIMENSIONS AND APPEARANCE

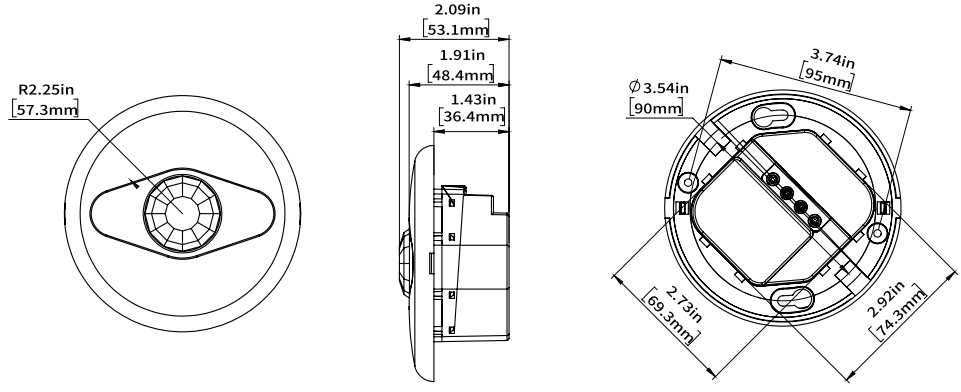

unit:mm

OCCUPANCY DETECTION OVERLAP

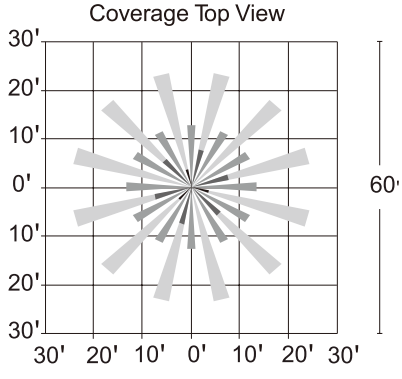

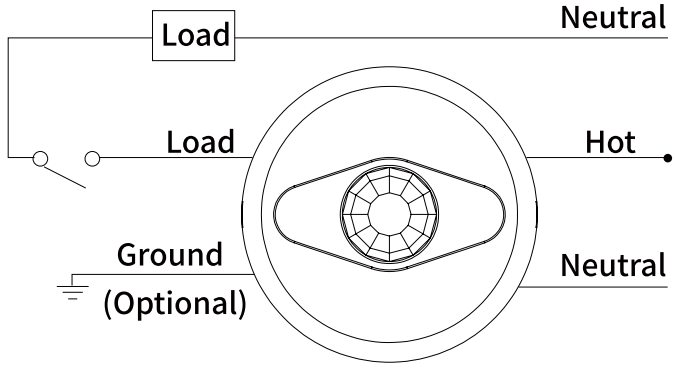

WIRING DIAGRAM

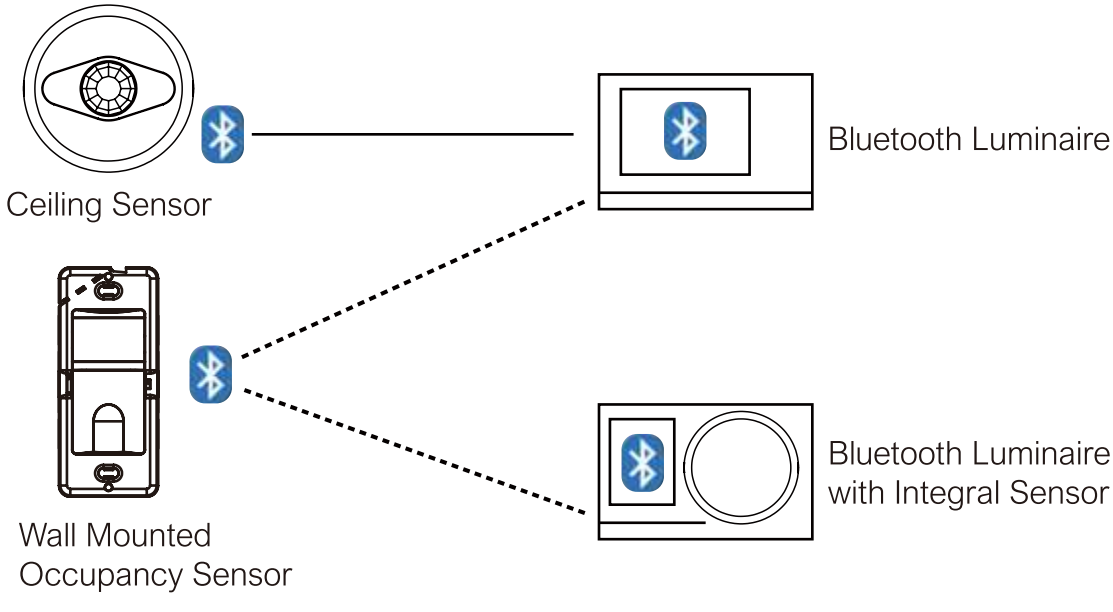

BRI-DT301-BLE-CB

SPECIFICATION

The low profile BRI-DT301-BLE-CB dual technology occupancy sensor combines the benefits of passive infrared (PIR) and ultrasonic technologies. The sensor mounts on the ceiling with a flat, unobtrusive appear-ance and provides 360 degrees of coverage.

Sharkward Bluetooth®

Technology Partner CASAMBI

OVERVIEW

- PIR &Ultrasonic sensor.
- Bluetooth® SIG mesh.
- LED Motion indicator.
- Mounting height up to 12 ft .
- 360° coverage pattern.

TECHNICAL DATA

- **120/230 (single phase)/277/347 VAC, 50/60 Hz**
- @120VAC, 800W Ballast/LED/Tungsten
  @230VAC, 1200W Ballast/LED/Tungsten
  @277VAC, 1200W Ballast/LED/Tungsten
  @347VAC, 1500W Ballast/LED/Tungsten
- Ultrasonic frequency of 40kHz
- Time delays: 5,10,15,20,25, or 30minutes, **test-mode**
- Sensitivity adjustment: High/low (for PIR sen-sitivity); ultrasonic sensitivity is variable with trimpot
- Built-in light level sensor – works from 10 to 300 footcandles (107.6 to 3,229.2 lux)
- Operating Temperature: 32°F to +131°F (0°C to +55°C)
- Multi-level, 360° Fresnel lens for superior occupancy detection
- Mounting options: 4 square junction box with double gang mudring; 4 inch octagonal junction box
- Dimensions: 4.50" diameter x 1.44" deep (114.5mm x 36.4mm)
- **UL and cUL listed**
- Wireless Standards: 5.0 Bluetooth Mesh
- **Five year warranty**

ORDERING INFORMATION

BRI-DT301-BLE-CB	Dual Technology • Line Voltage Occupancy With Bluetooth

DIMENSIONS AND APPEARANCE

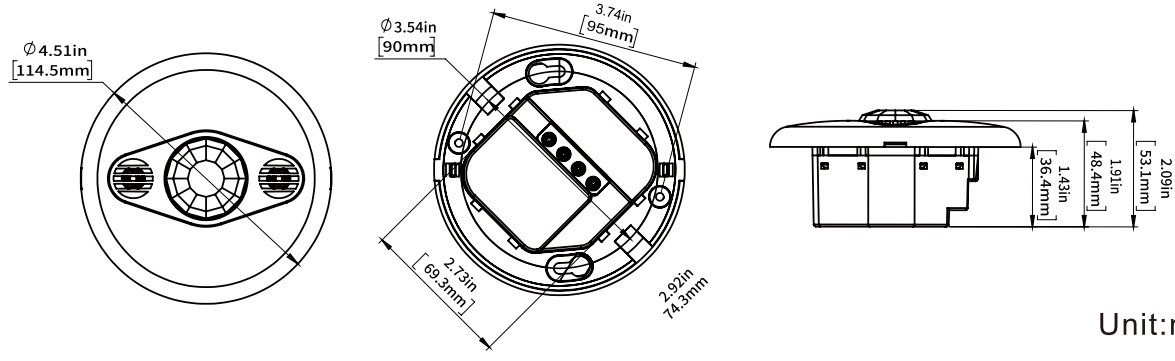

Unit:mm

OCCUPANCY DETECTION OVERLAP

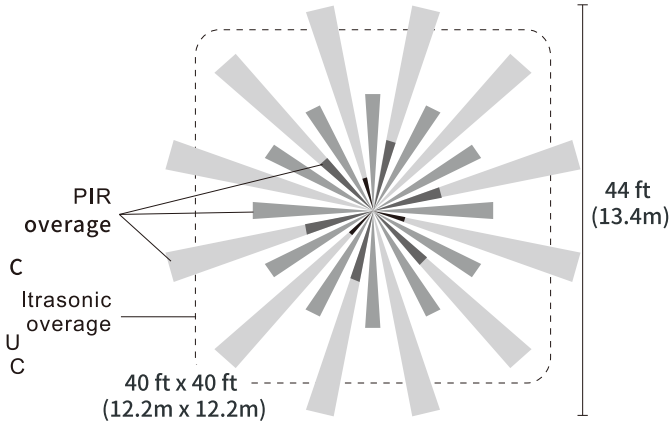

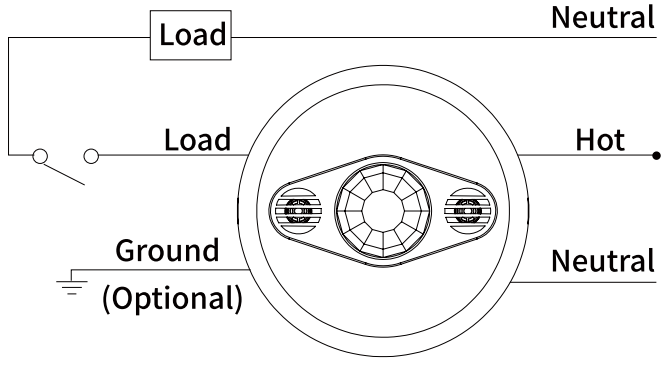

WIRING DIAGRAM

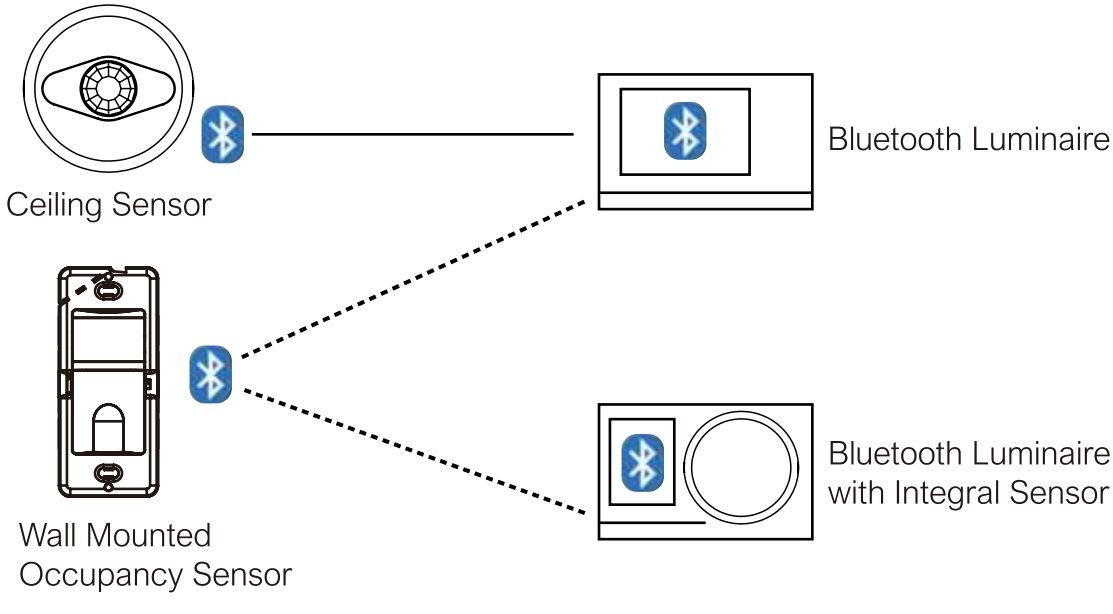

ANT-15P-3-BLE-CB-D4I

SPECIFICATION

The ANT-15P-3-BLE-CB-D4I uses PIR motion detector architecture and bluetooth to DALI technology for improved detection cvoverage applications.

Sharkward Bluetooth®

Technology Partner CASAMBI

OVERVIEW

- PIR sensor.
- Bluetooth® SIG mesh.
- High-End Trim, Zoning, Continuous Bi-level Dimming.
- LED Motion indicator.
- Mounting height up to 12 ft .
- 360° coverage pattern.
- Low Voltage connector.

TECHNICAL DATA

Motion Sensor	Passive infrared sensor
Input Power	12-24VDC
Powered by	DALI BUS
Control Output	DALI
Mounting height	13ft(4m) Max.
Detection angle	360°
Operating temperature	-20°C-60°C
Max Bluetooth Range	100ft(30m)
Warranty	5years

ORDERING INFORMATION

ANT-15P-3-BLE-CB-D4I	DALI BLE Fixture-Integrated PIR Sensor Controller

DIMENSIONS AND APPEARANCE

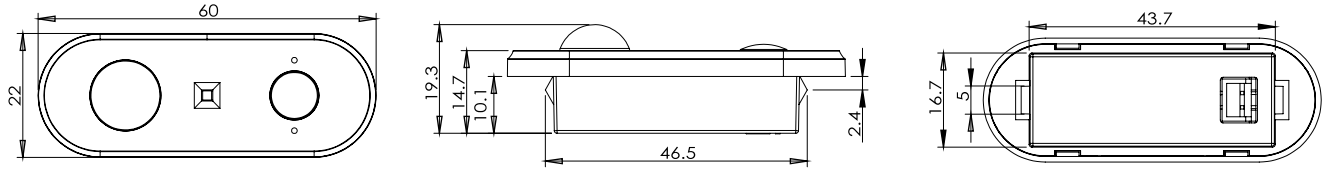

Unit:mm

OCCUPANCY DETECTION OVERLAP

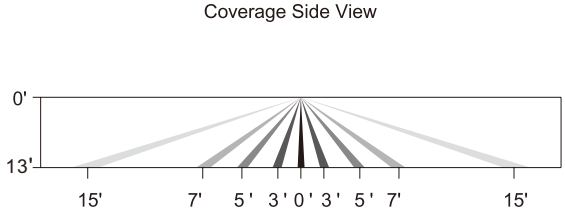

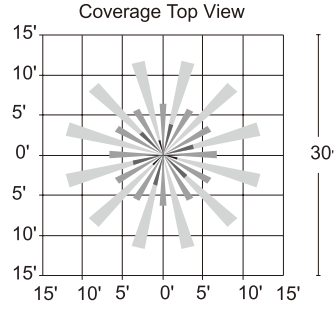

Minor Motion
Major Motion

WIRING DIAGRAM

Working with DALI D4i Driver(Integrated DALI BUS power supply)

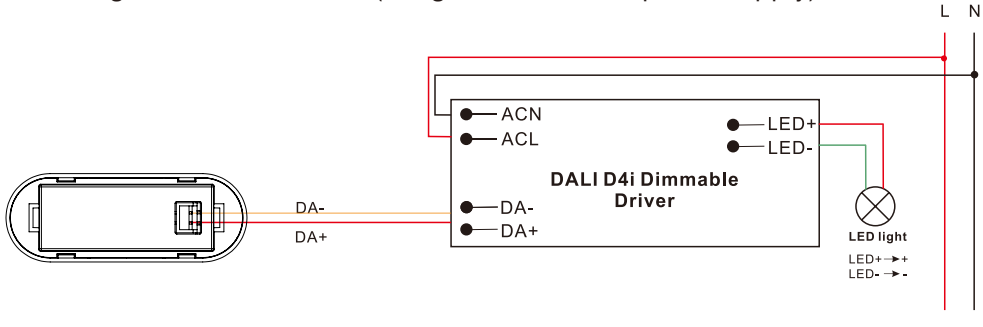

Working with DALI System (DALI BUS power supply)

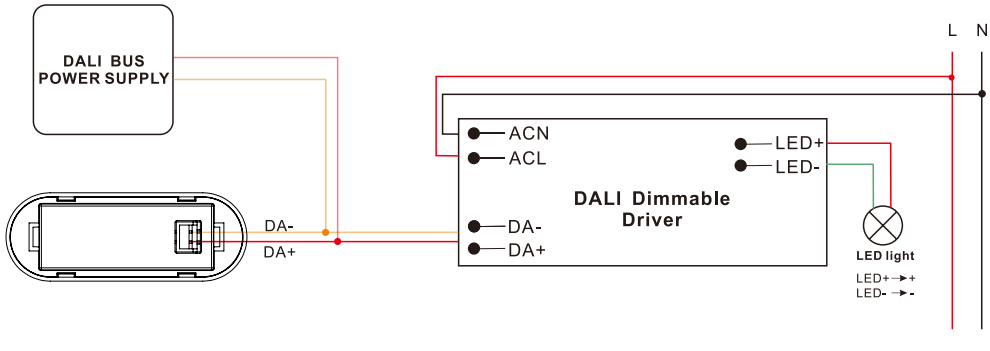

ANT-4E-BLE-CB-D

SPECIFICATION

The ANT-4E-BLE-SR-D uses PIR motion detector architecture and bluetooth to DALI technology for improved detection coverage applications.

Sharkward Bluetooth®

Technology Partner CASAMBI

OVERVIEW

- PIR sensor.
- Daylight Harvesting
- Bluetooth® SIG mesh.
- High-End Trim, Zoning, Continuous Bi-level Dimming.
- LED Motion indicator.
- Mounting height up to 12 ft .
- 360° coverage pattern.
- Low Voltage connector.

TECHNICAL DATA

Motion Sensor	Passive infrared sensor
Input Power	10-14VDC,>50mA
Control Output	0-10V,max 25mA sinking current
Mounting height	12ft Max.
Detection angle	360°
Operating temperature	-20°C-60°C
Max Bluetooth Range	100ft(30m)
Warranty	5years

ORDERING INFORMATION

ANT-4E-BLE-CB-D 10-14V DALI BLE Snap in PIR Sensor

DIMENSIONS AND APPEARANCE

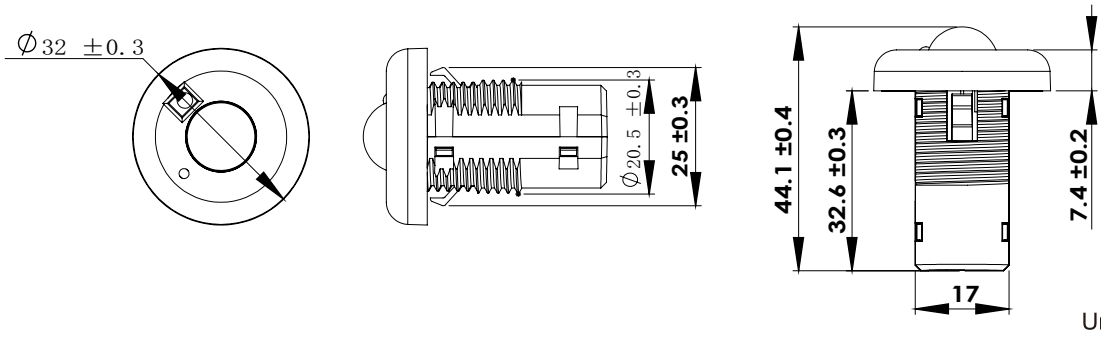

Unit:mm

OCCUPANCY DETECTION OVERLAP

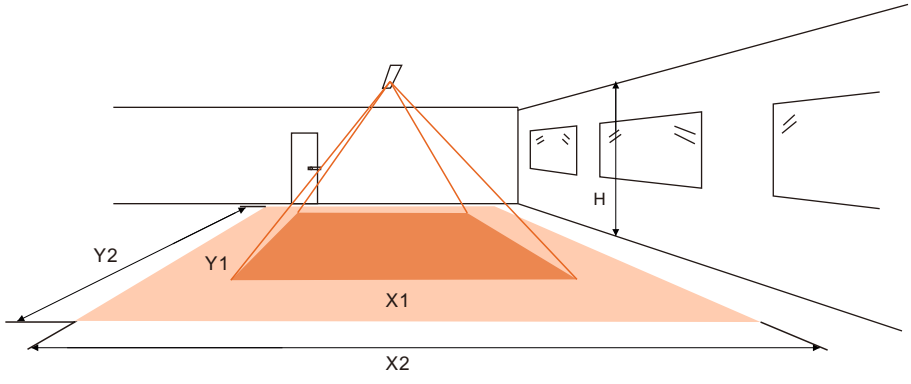

Height	Minor Movement		Major Movement	
H	Y1	X1	Y2	X2
8'/2.4m	10'/2.9m	9'/2.7m	15'/4.5m	10'/2.9m
10'/3m	12'/3.6m	11'/3.4m	18'/5.4m	12'/3.6m

Note: Longer dimension of detection area (Y1, Y2) is parallel to longer dimension.

WIRING DIAGRAM

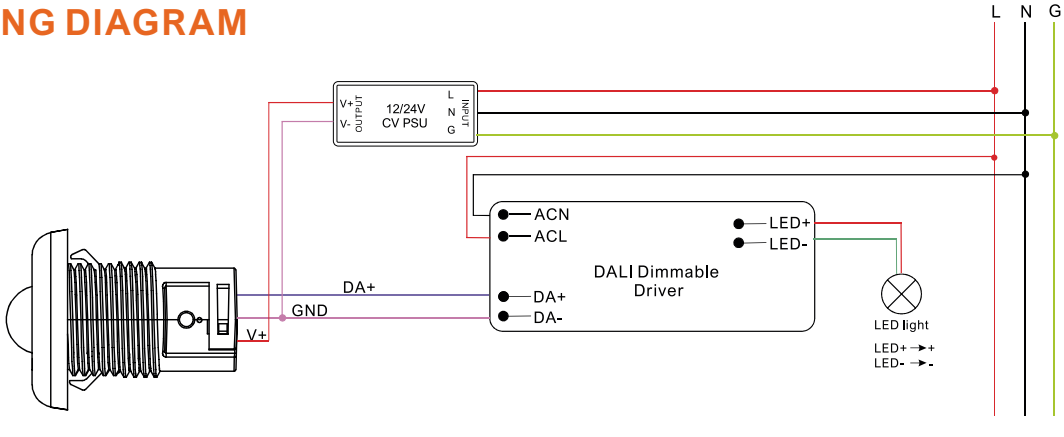

ANT-5-ZT-BLE-CB-D

SPECIFICATION

ANT-5-ZT-BLE-SR-D uses microwave motion detector architecture and DALI technology for improved detection coverage for high bay applications.
It utilizes a Bluetooth® Low Energy (BLE) mesh network.
Dimming levels and schedules can be set through CASAMBI APP.

Sharkward Bluetooth®

Technology Partner CASAMBI

OVERVIEW

- Microwave sensor.
- High-End Trim, Zoning, Continuous Bi-level Dimming.
- Mounting height up to 40 ft .
- 360° coverage pattern.
- Low Voltage connector.

TECHNICAL DATA

Motion Sensor	Microwave sensor
Input Power	12-24VDC,>50mA
Control Output	0-10V,max 25mA sinking current
HF System	5.8GHz±75MHz
Transmission power	<0.2mW
Mounting height	40ft(12m) Max.
Detection angle	360°
Operating temperature	-40℃~70℃
IP rating	65
Max Bluetooth Range	100ft
Connection method	Zhaga Book 18
Warranty	5years

ORDERING INFORMATION

ANT-5-ZT-BLE-CB-D	12-24V DALI BLE ZHAGA BOOK 18 Microwave Sensor

DIMENSIONS AND APPEARANCE

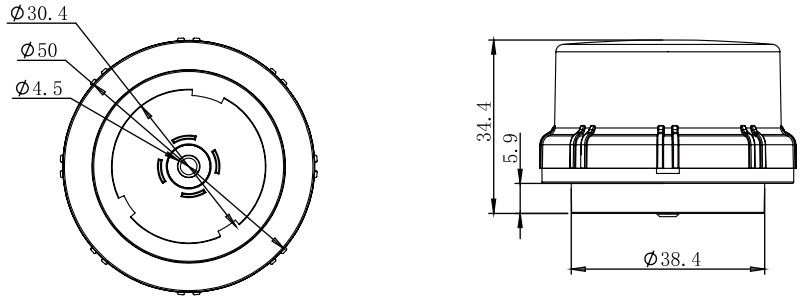

Unit:mm

OCCUPANCY DETECTION OVERLAP

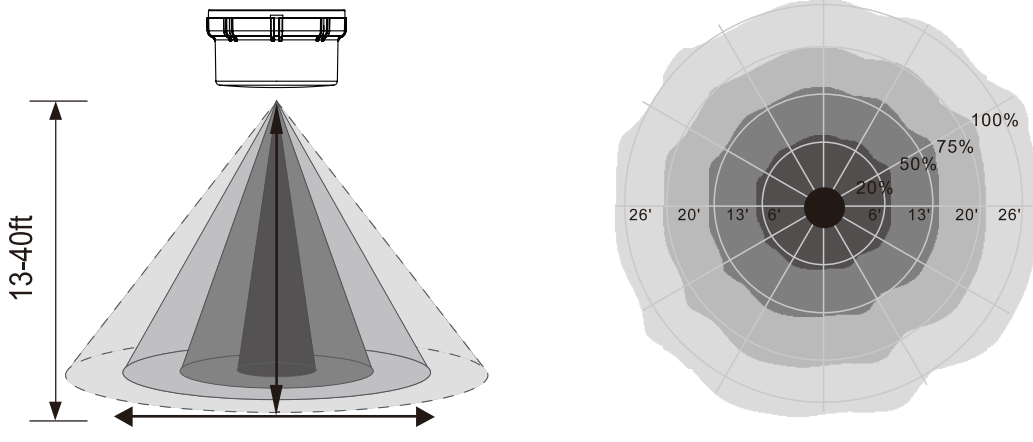

Height of installation13-40ft

WIRING DIAGRAM

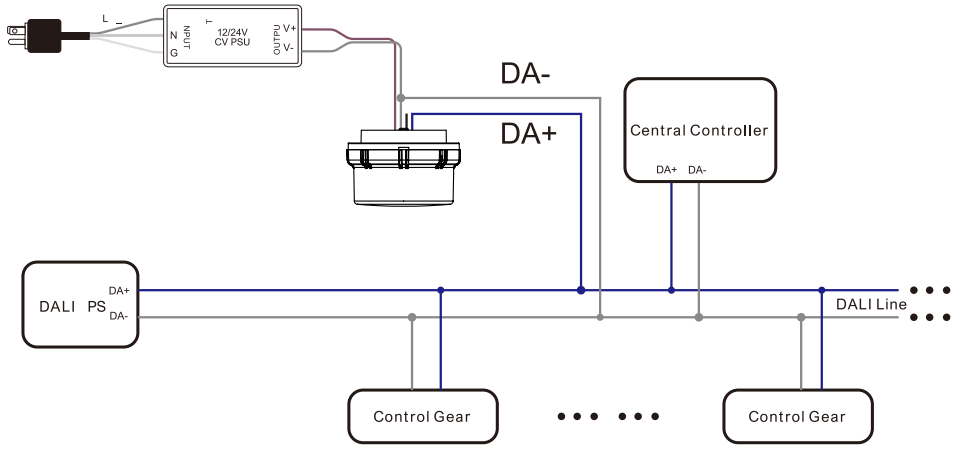

Note: please make sure the polarity of DALI signal of the sensor is correctly connected

ANT-6-ZT-BLE-CB-D

SPECIFICATION

ANT-6-ZT-BLE-CB-D uses PIR motion detector architecture and DALI technology for improved detection coverage for high bay applications.
It utilizes a Bluetooth® Low Energy (BLE) mesh network, Dimming levels and schedules can be set through CASAMBI APP.

Sharkward Bluetooth®
Technology Partner CASAMBI

OVERVIEW

- High-End Trim, Zoning, Continuous Bi-level Dimming Photocell.
- Mounting height up to 40 ft .
- 360° coverage pattern.
- Low Voltage connector.

TECHNICAL DATA

Motion Sensor	Passive infrared sensor
Input Power	12-24VDC,>50mA
Control Output	0-10V,max 25mA sinking current
Mounting height	40ft(12m) Max.
Detection angle	360°
Operating temperature	-20°C~60°C
IP rating	65
Max Bluetooth Range	164ft(50m)
Warranty	5years

ORDERING INFORMATION

ANT-6-ZT-BLE-CB-D	12-24V DALI BLE ZHAGA BOOK 18 PIR Sensor

DIMENSIONS AND APPEARANCE

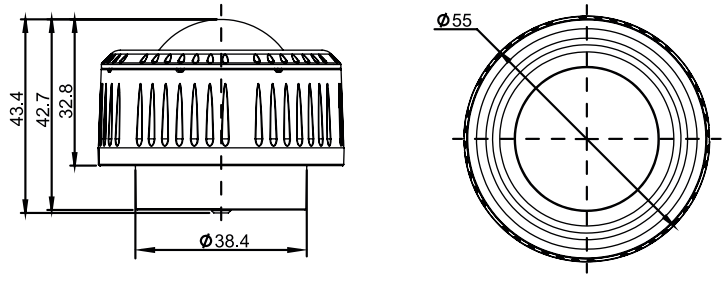

Unit:mm

OCCUPANCY DETECTION OVERLAP

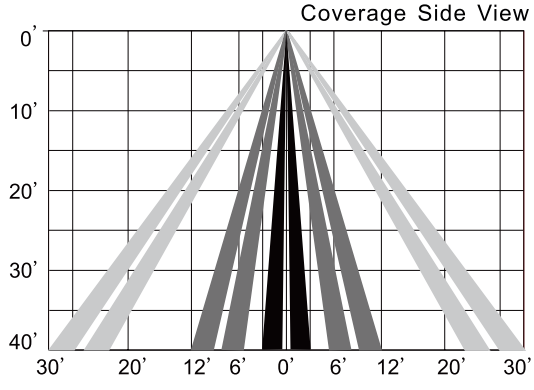

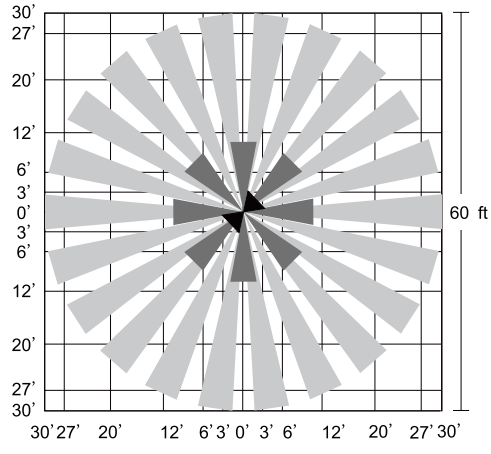

WIRING DIAGRAM

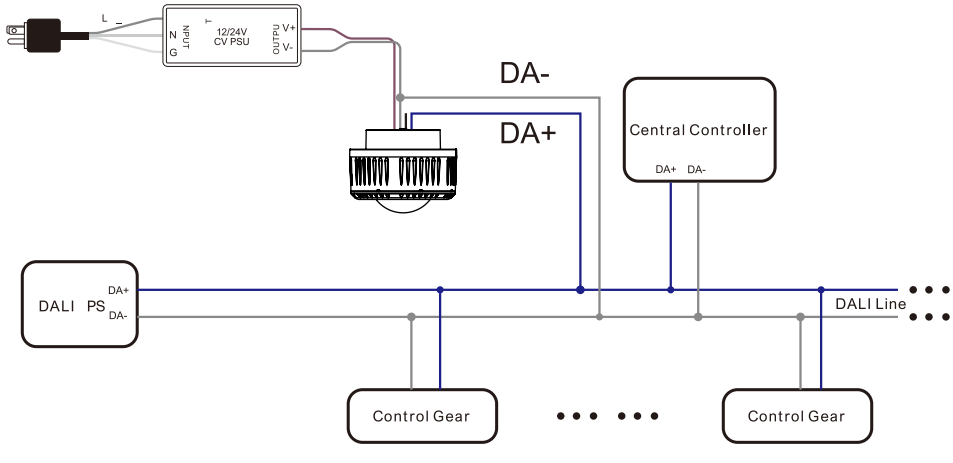

Note: please make sure the polarity of DALI signal of the sensor is correctly connected

BRI-CMP305-LV-BLE-CB-D

SPECIFICATION

BRI-CMP305-LV-BLE-CB-D uses PIR motion detector architecture and bluetooth to DALI technology for improved detection coverage applications.
It utilizes a Bluetoothe® low energy (BLE) mesh network. Dimming levels and schedules can be set through CASAMBI app

Sharkward Bluetooth®

Technology Partner CASAMBI

OVERVIEW

- PIR sensor.
- Bluetooth® SIG mesh.
- High-End Trim, Zoning, Continuous Bi-level Dimming.
- LED Motion indicator.
- Mounting height up to 12 ft .
- 360° coverage pattern.
- Low Voltage connector.

TECHNICAL DATA

Motion Sensor	Passive infrared sensor
Input Power	12-24VDC,>50mA
Control Output	0-10V,max 25mA sinking current
Mounting height	12ft(4m) Max.
Detection angle	360°
Operating temperature	-20°C-60°C
Max Bluetooth Range	100ft(30m)
Warranty	5years

ORDERING INFORMATION

BRI-CMP305-LV-BLE-SR-D	0-10V Ceiling BLE DALI PIR Sensor

DIMENSIONS AND APPEARANCE

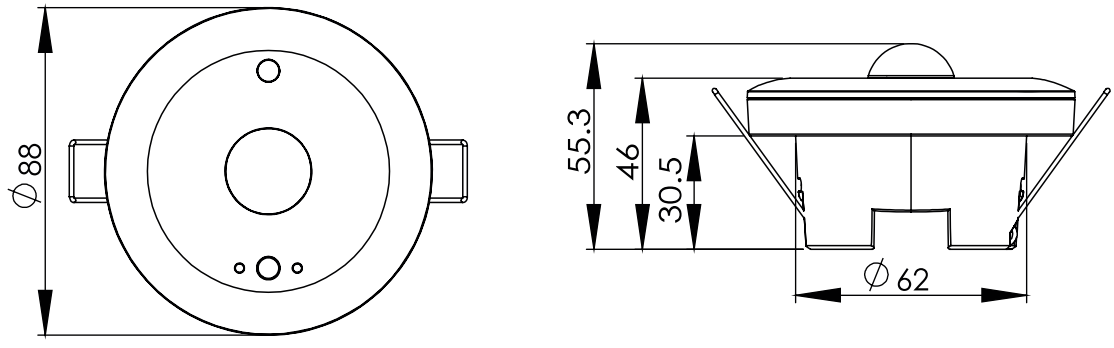

INSTALLATION Ceiling Recessed

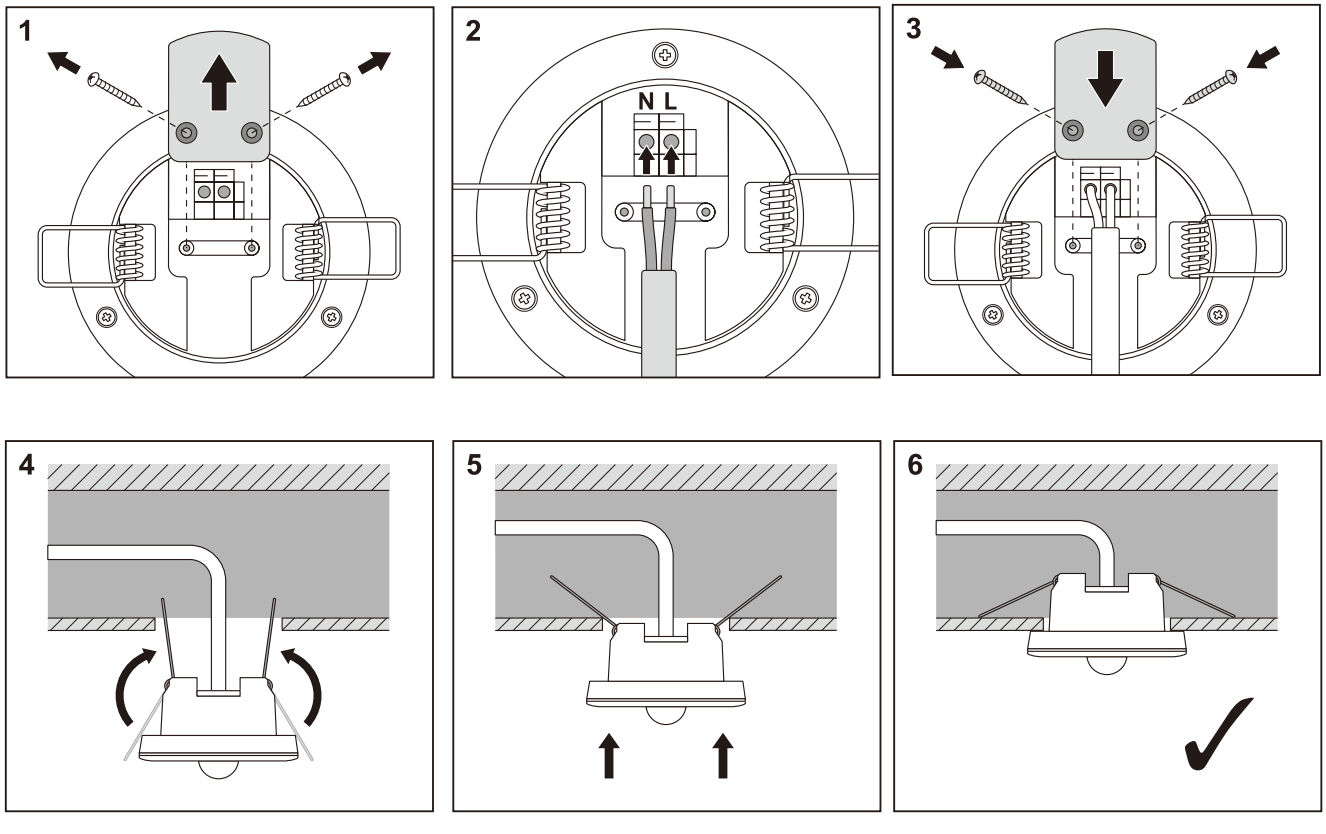

Surface Mounted

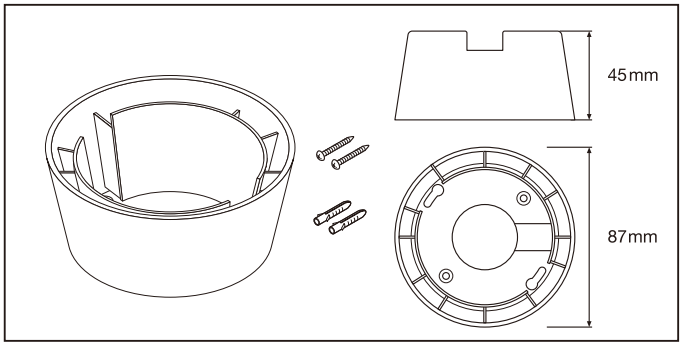

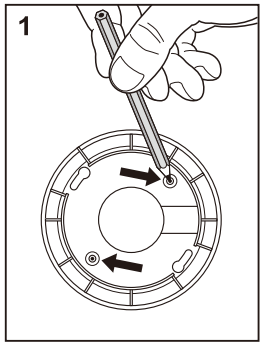

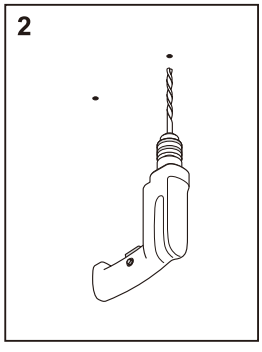

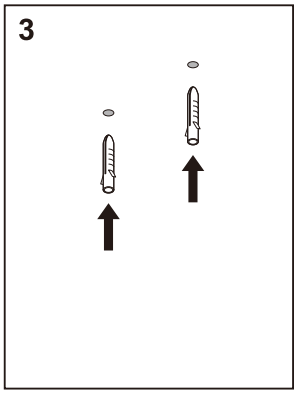

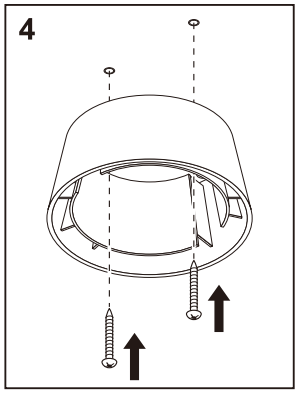

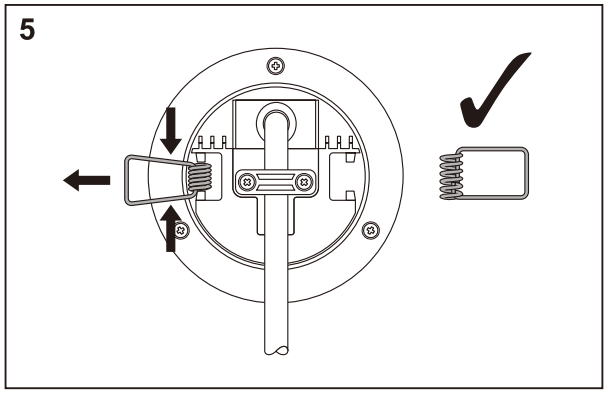

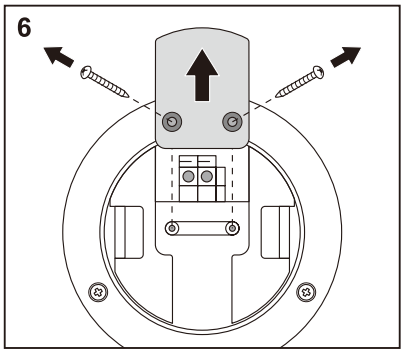

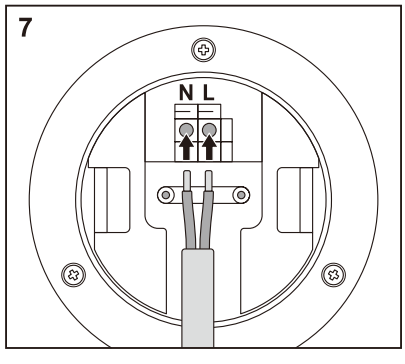

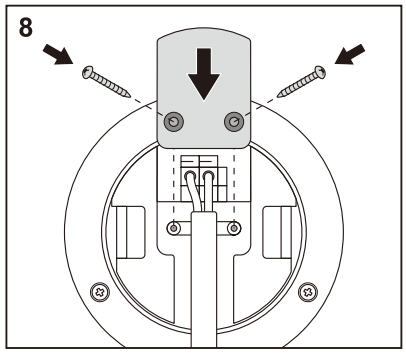

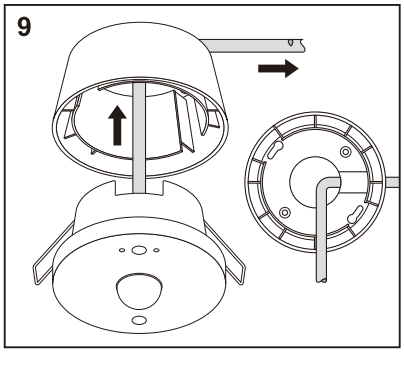

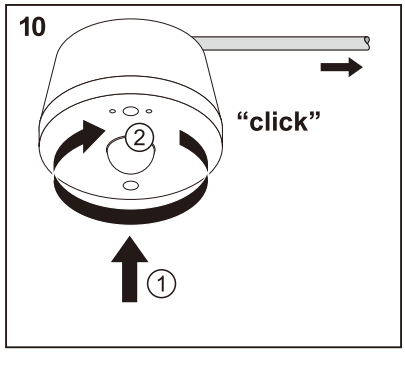

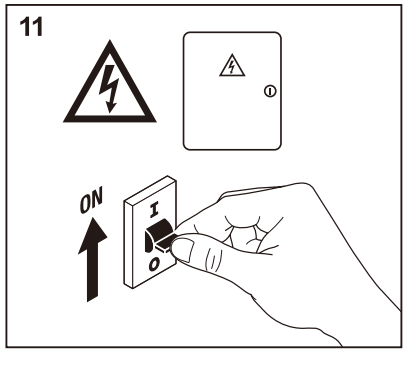

OCCUPANCY DETECTION OVERLAP

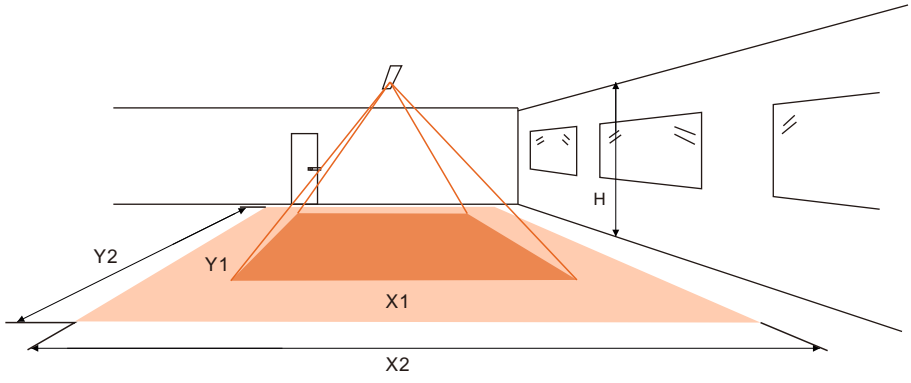

Height	Minor Movement		Major Movement	
H	Y1	X1	Y2	X2
8'/2.4m	10'/2.9m	9'/2.7m	15'/4.5m	10'/2.9m
10'/3m	12'/3.6m	11'/3.4m	18'/5.4m	12'/3.6m

Note: Longer dimension of detection area (Y1, Y2) is parallel to longer dimension.

WIRING DIAGRAM

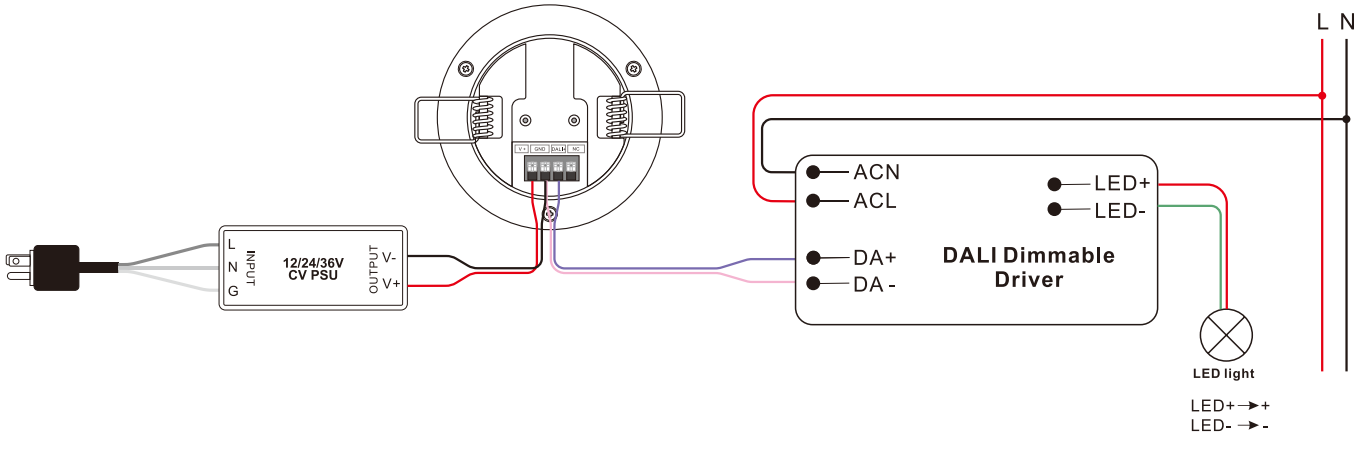

BC-USDM101-3-CB

SPECIFICATION

BC-USDM101-3-CB Bluetooth mesh dimmers provide automatic lighting control for a variety of indoor applications.They can replace any standard single-pole wall switch. 2-Button can be used for On/Off, and dimming controls.

Sharkward Bluetooth®

Technology Partner CASAMBI

OVERVIEW

- Bluetooth® SIG mesh.
- Manual on/off (wireless).
- Dim up/down (wireless).
- LED status indicator light.
- Mounts in any standard wall box.
- Color: white.

TECHNICAL DATA

Summary

- Product Type: Dimmer Wall Switch
- Input Voltage | Power Consumption: 120VAC , 60Hz | Max 1.0W
- Mounting: Standard wall box
- Max Bluetooth Range: 200'(60m)
- Operating temperature: 0° to 55°C
- Storage Temperature: -10° to 60°C
- Relative Humidity: 90-95% non-condensing at 30°C
- 5-years limited warranty

Listings

- FCC
- ETL
- DLC
- Bluetooth®
- Declaration ID: D062134

Note:
1. Bluetooth Range is highly dependent on the integration of fixtures, surrounding environment and conditions. It is recommended to conduct testing for range accuracy.

ORDERING INFORMATION

BC-USDM101-3-CB	120V Wireless 2-Button Dimmer Wall Switch

PRODUCT OUTLINE

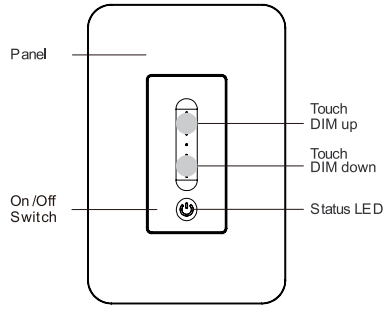

RESET

Press and hold Switch button and "DIM up" for 5s to reset the Dimmer and get into quick configure mode.

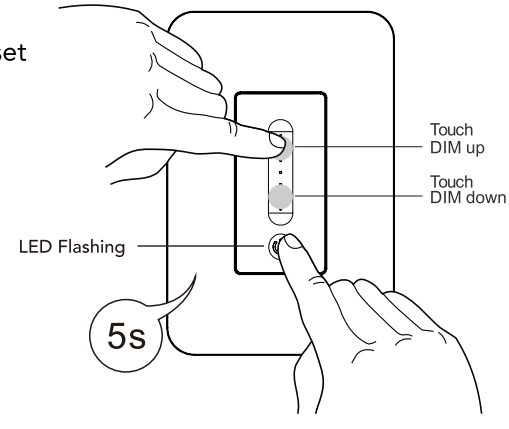

DIMENSIONS AND APPEARANCE

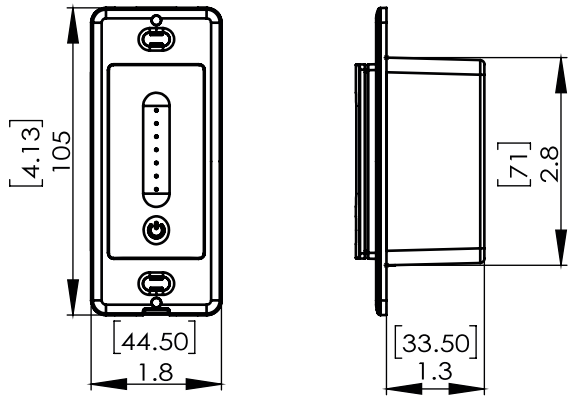

Unit: [mm] in

WIRING DIAGRAM

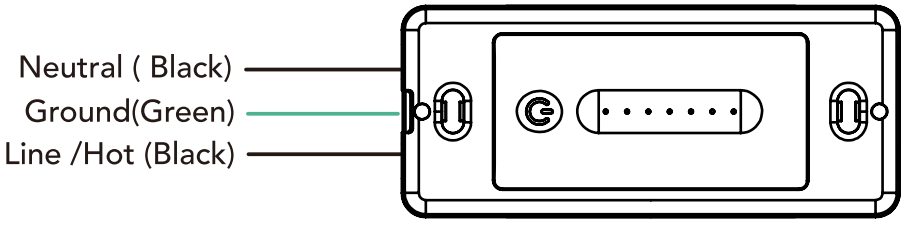

BRI-WS204-CB

SPECIFICATION

The CASAMBI Switch(BRI-WS204-CB) is made up of two parts: the base plate and the remote control enables manual control of light fixtures through CASAMBI's Lighting control system(SAAS and APP).

Sharkward Bluetooth®

Technology Partner CASAMBI

OVERVIEW

The CASAMBI switch provides the basic control functions of a standard wall switch with preset dimming capabilities without any additional wiring. The CASAMBI switch gives you the flexibility to predefine&change light colors (CCT) and light levels that can be accessed at the push of a button.

FEATURES AND BENEFITS

Localized Microprocessor Control: Each The CASAMBI switch is a fully-fledged computing and communications device. The control communicates with CASAMBI Smart Sensors and Controllers wirelessly, enabling the sensor to make local decisions regardless of the icloud network status.

Programmable: at the push of a button to predefine&change the light colors and light.

Code Compliant: For regions where building codes require that a manual-on/manual-off,DIM up(colors up).DIM down(colors down) switch be located in any enclosed space, The CASAMBI switch fulfills this requirement.

Simple and Low-cost Installation: The CASAMBI switch does not require any external power or special low voltage wiring. The CASAMBI switchl can be installed directly on the wall by adhesive backing or over existing junction boxes.

Standards-Based Networking and Security: The 802.15.4 compatible radio transmits messages in the 2.4GHz band while avoiding interference with any Wi-Fi or other networks. All messages are AES-128 encrypted to provide network security.

Minimal Air-time: The CASAMBI Switch transmits its messages in short bursts to CASAMBI sensors, utilizing very little of the channel capacity and minimizing collisions with other network traffic.Minimal Maintenance: With an expected battery life of more than two years, the CASAMBI switch has minimal maintenance requirements.

ORDERING INFORMATION

BRI-WS204-CB	4-Button Wireless Wall Switch

DIMENSIONS AND APPEARANCE

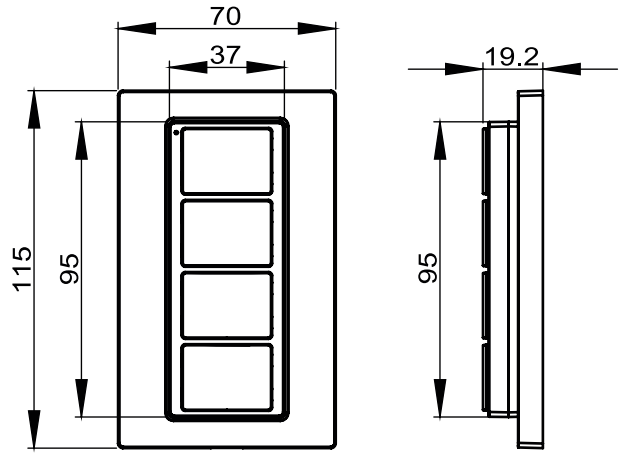

Unit:mm

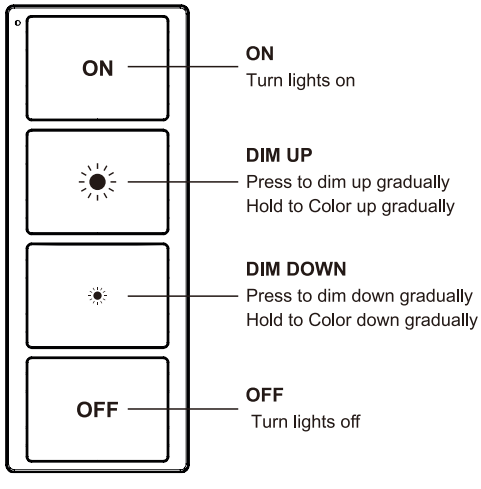

BC-USDM101-4-CB

SPECIFICATION

The white 6-Button Keypad Dimmer is designed to replace your existing wall switch and add enhanced lighting control. This dimmer has 6 front-panel buttons for direct control of your CASAMBI connected devices. When paired with CASAMBI control devices, you can download the free CASAMBI app to control the keypad Dimmer from devices such as smartphones and tablets.

Sharkward Bluetooth®

Technology Partner CASAMBI

OVERVIEW

The CASAMBI switch provides the basic control functions of a standard wall switch with preset dimming capabilities. The CASAMBI switch gives you the flexibility to predefine&change light colors (CCT) and light levels that can be accessed at the push of a button.

FEATURES AND BENEFITS

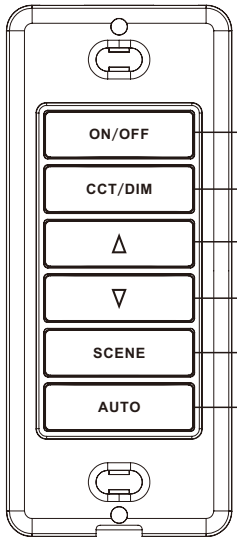

ON/OFF: Turn lights on/Turn lights OFF

CCT/DIM: Change between CCT/DIM

UP: Press to Dim/Color up 5~10%
Hold to Dim/Color up gradually

DOWN: Press to Dim/Color down 5~10%
Hold to Dim/Color down gradually

SCENE: Control individual devices, complete scenes or a combination

AUTO: Intelligent mode, entering sensor working state

ORDERING INFORMATION

BC-USDM101-4-CB	6-Button Wireless Dimmer Wall Switch

Step-by-step guide to install a CASAMBI switch

Step 1: Find a good spot for your Switch

Step 1: Find a suitable position for your switch. You need a junction box, the switch requires 120VAC power, maybe cover a traditional light switch. The best place to install a CASAMBI switch is near an entrance or seating area, such as around a living room sofa or dining table.

Step 2: Mount it with screws

Disconnect the power, connect the switch to the 120VAC wire,then secure the CASAMBI switch to the existing junction box (with screws).

Step 3: Factory reset the switch and Pair your Dimmer switch with your lights

The Bluetooth device can be restored to factory settings by simultaneously holding down the “On/Off” key and the " Δ " key for 3 seconds. During this process, the green indicator will blink three times at an interval of 0.5 second.
After the device restarts, the indicator will blink at a slow rate (once every 1 second) for 60 seconds until the device enters network distribution mode. If no operation is performed, the device will transition into a low-power state. Once connected to the network, the device will enter a low-power working state.

Step 4: The distribution network of the gateway

Press the "ON/OFF" and "AUTO" buttons at the same time for 3 seconds. The green indicator blinks once. The serial port sends the network distribution command FB 00 14 00 EF 55 to the gateway, and the gateway device is in the state to be distributed.

TECHNICAL SPECIFICATIONS

Action: Six push buttons;
Up to six software-configurable scenes
Actuations: Rated for 50,000 actuations
Power: 120VAC,60Hz
Max Fixtures Per Control: 100
Interoperability: CASAMBI Sensors and Gateways
Operating Temp.: 32 to 122 F/0° to 50°C
Enclosure: Recyclable PC
Wireless Standards: IEEE 802.15.4
Radio Frequency: 2400-2483.5 MHz
Wireless Range: 60 ft. (18 m) radius open range
Encryption: AES-128

ORDERING INFORMATION

BC-USDM101-4-CB	6-Button Wireless Dimmer Wall Switch

COMPLIANCE

Europe	CE RoHS REACH
United States	FC UL LISTED
Canada	c UL LISTED

WARRANTY: 5 years

BC-USUSB101-3-CB

SPECIFICATION

The BC-USUSB101-3-CB is a Bluetooth controlled smart wall socket, and also has a USB socket, can be used for mobile phone charging, APP can control the socket, very convenient, intelligent.

Sharkward Bluetooth®

Technology Partner CASAMBI

FEATURES & SPECIFICATIONS

Basic Features

- Bluetooth® SIG mesh
- Mounts in any standard wall box
- Color: white
- Technology Partner CASAMBI.

Summary

- Product Type: Bluetooth Smart Wall Socket
- Input Voltage:15A 125VAC 60Hz
- Socket outlet Output: Max.15A 125VAC 60Hz Resistive
- USB Output:5VDC Max.2.1A
- Wireless Frequency:2.4GHz
- Wireless Standard:IEEE802.11 b/g/n
- Mounting: Standard wall box
- Max Bluetooth Range: 65'(20m)
- Operating temperature:-10° to 55°C
- Storage Temperature: -10° to 60°C
- Relative Humidity: 90-95% non-condensing at 30°C
- 5-years limited warranty

Listings

- FCC
- ETL
- DLC
- Bluetooth®

Note:
1. Bluetooth Range is highly dependent on the integration of fixtures, surrounding environment and conditions. It is recommended to conduct testing for range accuracy.

ORDERING INFORMATION

BC-USUSB101-3-CB	Bluetooth Smart Wall Socket

PRODUCT OUTLINE

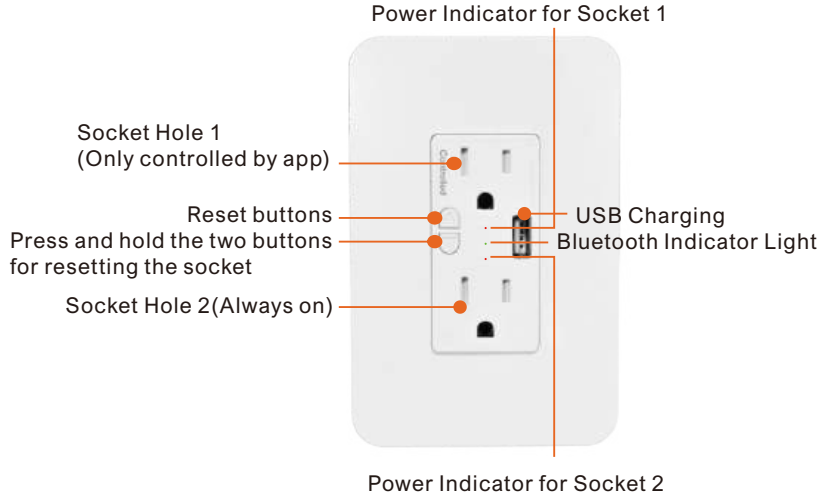

DIMENSIONS

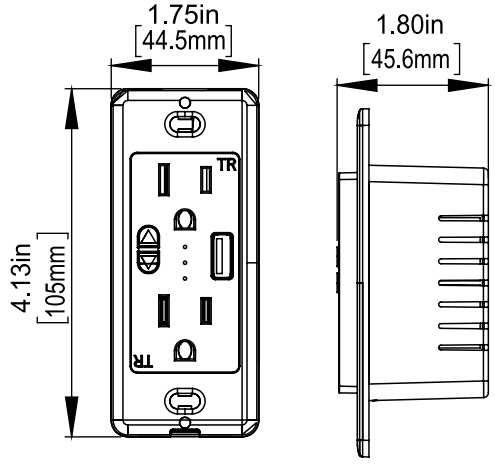

unit:mm

WIRING DIAGRAM

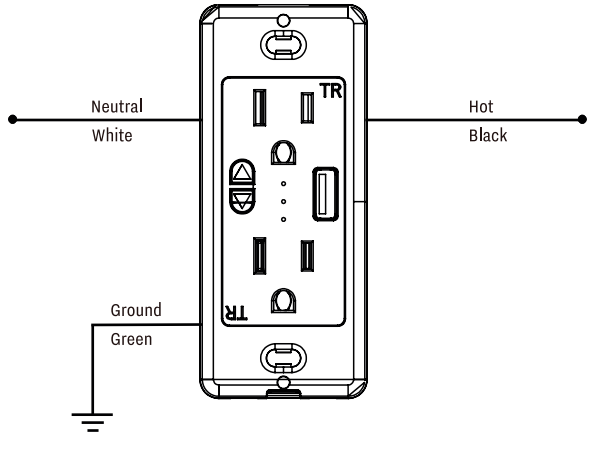

GT-001-CB

SPECIFICATION

The GT-001-CB energy monitoring dongle is for collecting energy consumption data in order to generate energy report. ETC dongle also has RTC (Real Time Clock) Function The GT-001-CB is a Real Time Clock for time syncing for all devices in one Zone.

Sharkward Bluetooth®

Technology Partner CASAMBI

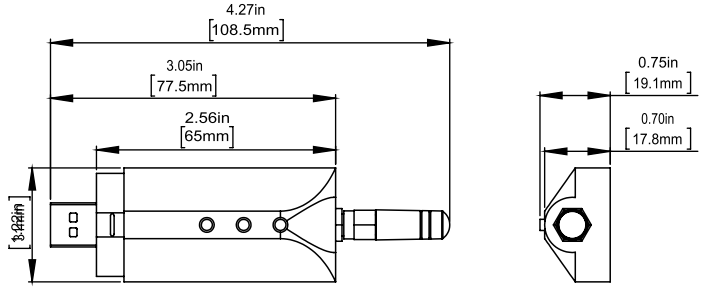

OVERVIEW

- GT-001-GE is suitable for a variety of indoor applications.
- Powered by USB-A receptacle.
- Constructed of white/black PC.

Note:

Bluetooth Range is highly dependent on the integration of fixtures, surrounding environment and conditions. It is recommended to conduct testing for range accuracy.

Press and hold the " S1"and "S3"button for 5 seconds until the green light starts to blink . You can scan and add Gateway by APP .

Press and hold the " S1"and "S2"button for 5 seconds . You can scan and add Timer by APP .

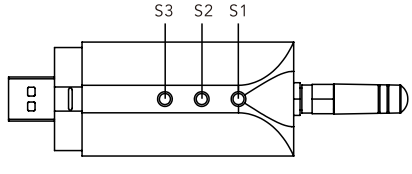

TECHNICAL DATA

Input Voltage	USB 5V
Input Current	1A Max
Bluetooth Transmit	100ft Max.
Radio Frequency	2.4GHz ± 5MHz
Bluetooth Version	5.0 Housing
Warranty	5years
Operating Temperature	-30°C to 55°C,-22°F to 131°F
Storage Temperature	-30°C to 85°C,-22°F to 185°F
IP rating	IP20

ORDERING INFORMATION

GT-001-CB	Energy Monitoring USB Dongle and Real Time Clock

BRI819-G-BLE-CB

OVERVIEW

The BRI819-G-BLE-CB is a gateway for outdoor using, it can collect energy consumption data in order to generate energy report. This also has RTC (Real Time Clock) function for time syncing for all devices in one zone.

Sharkward Bluetooth®

Technology Partner CASAMBI

FEATURES & SPECIFICATIONS

Construction

- BRI819-G-BLE-GE is suitable for outdoor applications.
- Powered by USB-A receptacle.
- Constructed of gray/black PC.

Electrical

- BRI819-G-BLE-GE utilizes a Bluetooth Low Energy (BLE) mesh network.
- Max Bluetooth range is 495ft(150m) line of sight .
  It is recommended to conduct testing for range accuracy
- Input Voltage:120-277vac,50/60Hz
  Input Current:100mABluetooth
  Transmit: 495ft(150m)
  Radio Frequency:2.4Ghz+5MHz
  Bluetooth Version:5.0
  Outdoor and Indooruse

Installation

- It has two ways ofinstallation
  A. Fixed on the wall with screws
  B. Fixed on the cylinder with hoseclamps
  OperatingTemperature:-30C-60'C

Warranty

- 5 years warranty.

Listings

- FCC
- ETL
- DLC
- Bluetooth®
- Declaration ID: D062134

Note:

Bluetooth Range is highly dependent on the integration of fixtures, surrounding environment and conditions.It is recommended to conduct testing for rangeaccuracy.

ORDERING INFORMATION

BRI819-G-BLE-CB	Industrial Outdoor Gateway

Our office:
#88 Gongmao Road No.3,
Jishigang Industrial Zone
Haishu District, Ningbo City
315171,China

Contact:
info@sharkward.com
www.sharkward.com